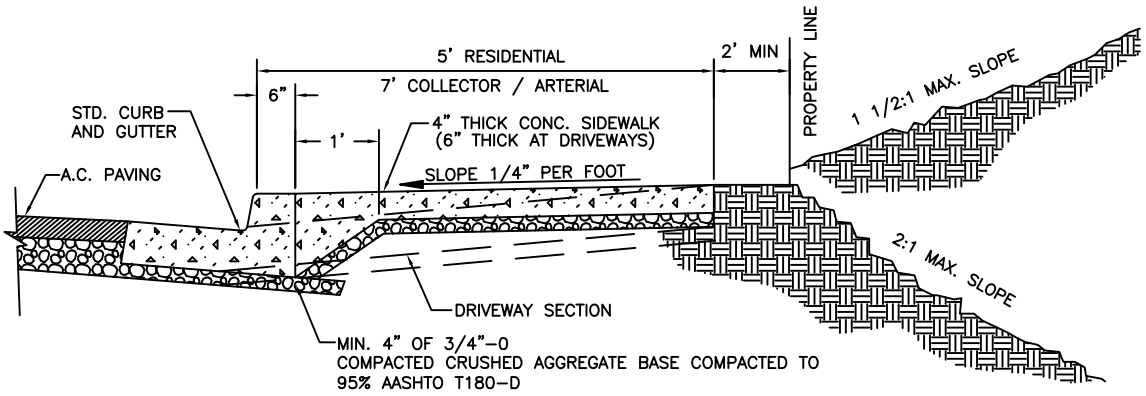


# TYPICAL SIDEWALK CROSS SECTION

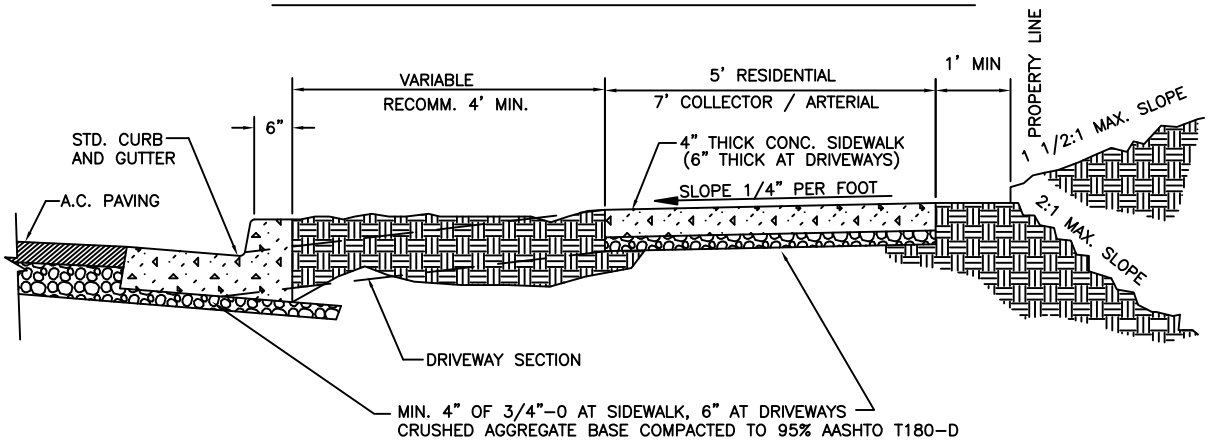


# TYPICAL SETBACK SIDEWALK CROSS SECTION

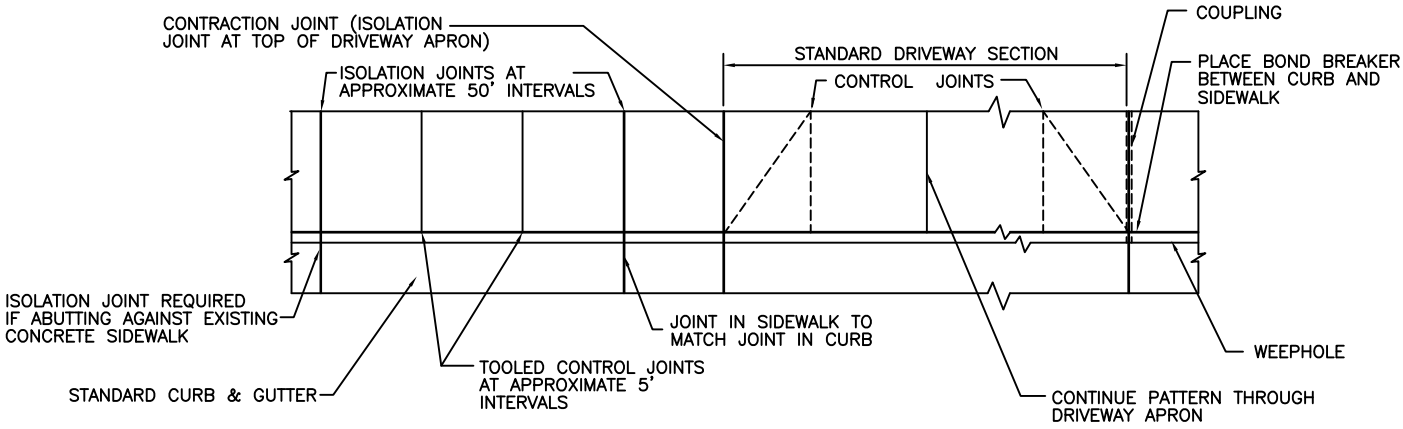


# TYP. PLAN VIEW

NOTES:

1. ALL CONCRETE SHALL BE:
   A. MIN. 5 SACK MIX W/ MAX. 4" SLUMP
   B. MAX. AGGREGATE SIZE 3/4"
   C. 3300 P.S.I. – 28 DAY
   D. AIR CONTENT SHALL BE 4.0 TO 6.0 PERCENT
2. ALL WORK AND MATERIALS SHALL CONFORM TO APWA/ ODOT STANDARD SPECS.
3. INSTALL A MIN. OF (2) – 3" WEEP HOLES FOR EACH RESIDENTIAL LOT FOR ROOF DRAINS, EITHER 2.0' FROM THE END OF THE DRIVEWAY APRON, OR 5.0' FROM THE THE PROPERTY LINE.
4. GRANULAR MATERIAL UNDER SIDEWALKS & DRIVEWAYS SHALL BE 3/4"-0 CRUSHED ROCK COMPACTED TO 95% AASHTO T180-D
   A. 4" MIN. THICKNESS UNDER SIDEWALKS
   B. 6" MIN. THICKNESS UNDER DRIVEWAYS
5. ALL COMMERCIAL SIDE WALKS AND DRIVEWAYS SHALL BE 6" THICK WITH NO. 4 REBAR @ 16-INCH O.C. GRID
6. ASPHALT IMPREGNATED FELT JOINTS ARE REQUIRED AT 50-FT INTERVALS AND PCR'S AT STREET CORNERS.

FILE: CP-A-5A.DWG

| | | | | |
|---|---|---|---|---|
| CENTRAL POINT — *CITY OF* *CENTRAL POINT* *PUBLIC WORKS DEPARTMENT* | UNIFORM STANDARDS FOR PUBLIC WORKS CONSTRUCTION | CHECKED | DATE | A-5A |
| | SIDEWALKS | APPROVED | DATE | |
| | | REVISED | DATE | DRAWING No. |

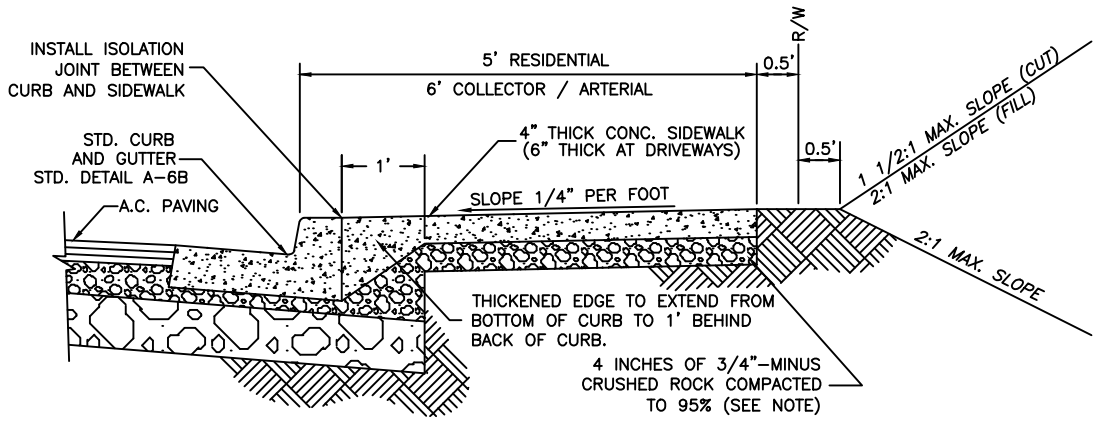


## SIDEWALK ADJACENT TO TYPE A CURB & GUTTER

LOCAL STREET ONLY

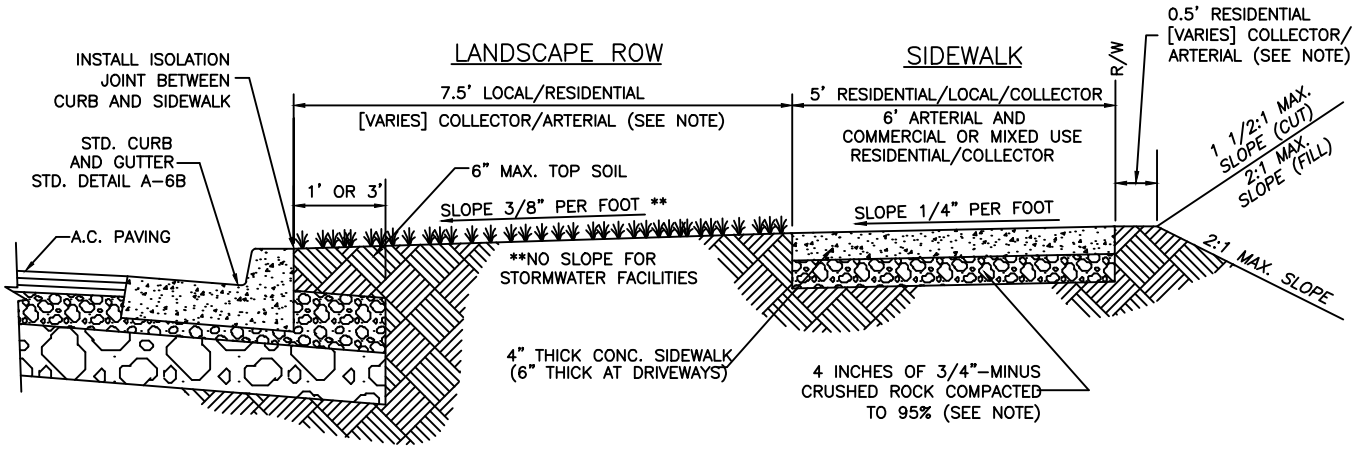


## SIDEWALK WITH LANDSCAPE ROW AND TYPE A CURB & GUTTER

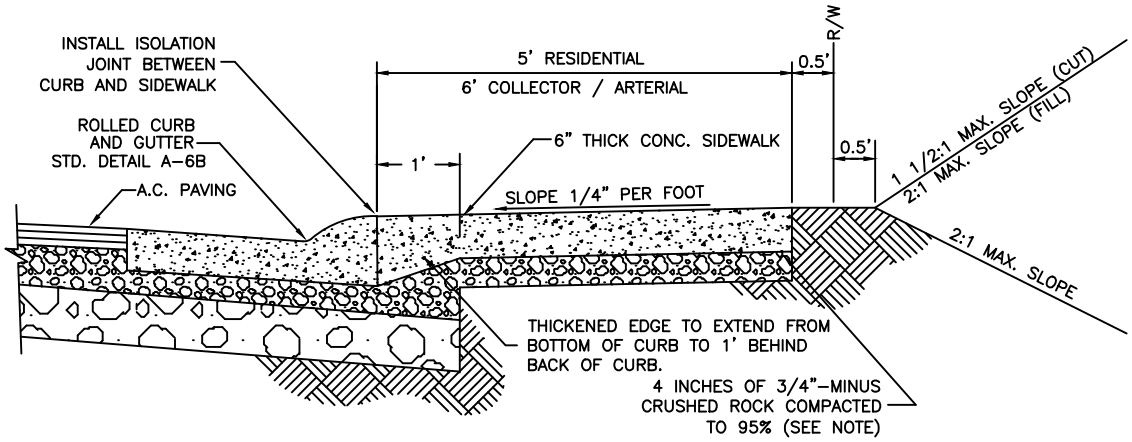


## SIDEWALK ADJACENT TO ROLLED CURB & GUTTER

NOTES:

1. SIDEWALKS SHALL HAVE A NOMINAL THICKNESS OF 4" AND 6", RESPECTIVELY.
2. SIDEWALK SECTIONS THROUGH DRIVEWAYS SHALL HAVE A NOMINAL THICKNESS OF 6" FOR TYPE A CURB & GUTTER
3. WHERE SIDEWALK IS ADJACENT TO CURB, PLACE CONSTRUCTION JOINT IN LINE WITH CURB JOINT (10') AND IN BETWEEN (5')
4. ALL MIX SHALL BE VIBRATED OR TAMPED, AS DIRECTED, FOR COMPACTION.
5. GRANULAR MATERIAL UNDER SIDEWALKS & DRIVEWAY SHALL BE 3/4"-MINUS CRUSHED ROCK, COMPACTED TO 95% AAHSTO T180-D
6. ALL CONCRETE SHALL BE CLASS 3300; 3/4"; 0.54 W/C RATIO
7. ALL WORK & MATERIALS SHALL CONFORM TO CURRENT APWA STANDARDS & SPECS

FILE: CP-A-5B.DWG

| | | | | |
|---|---|---|---|---|
| CENTRAL POINT | *CITY OF* *CENTRAL POINT* *PUBLIC WORKS DEPARTMENT* | UNIFORM STANDARDS FOR PUBLIC WORKS CONSTRUCTION | CHECKED / DATE | A-5B |
| | | SIDEWALKS | APPROVED / DATE | |
| | | | MHO REVISED / 1/27/14 DATE | DRAWING No. |

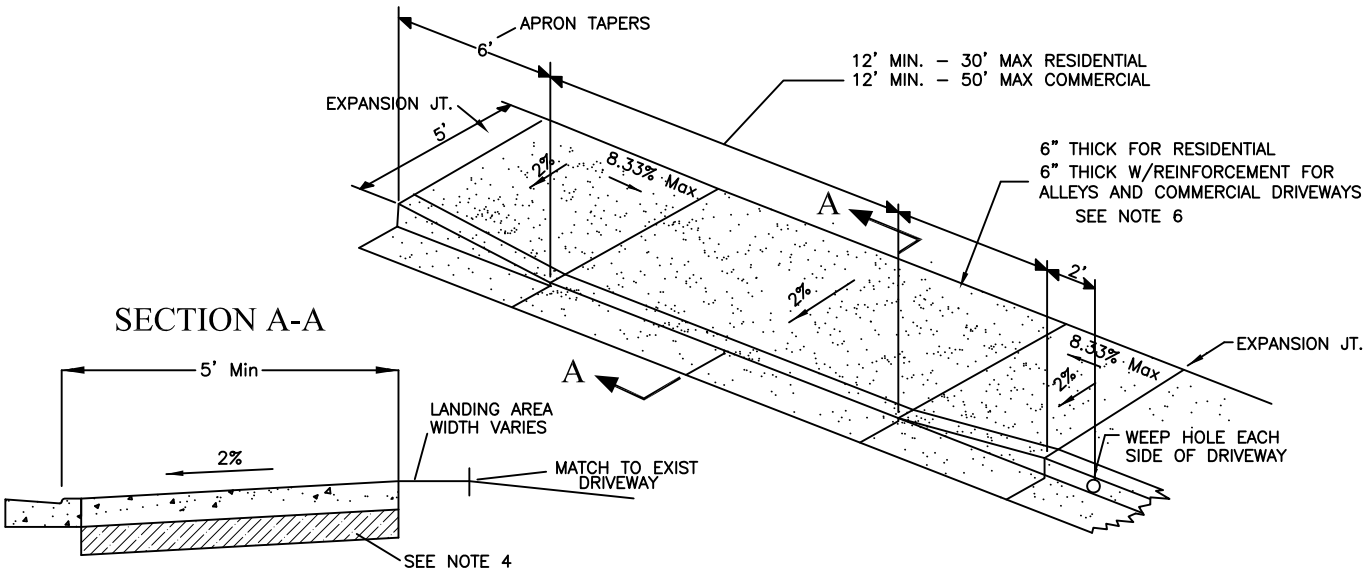


## FULLY LOWERED DRIVEWAY/ ALLEY APPROACH

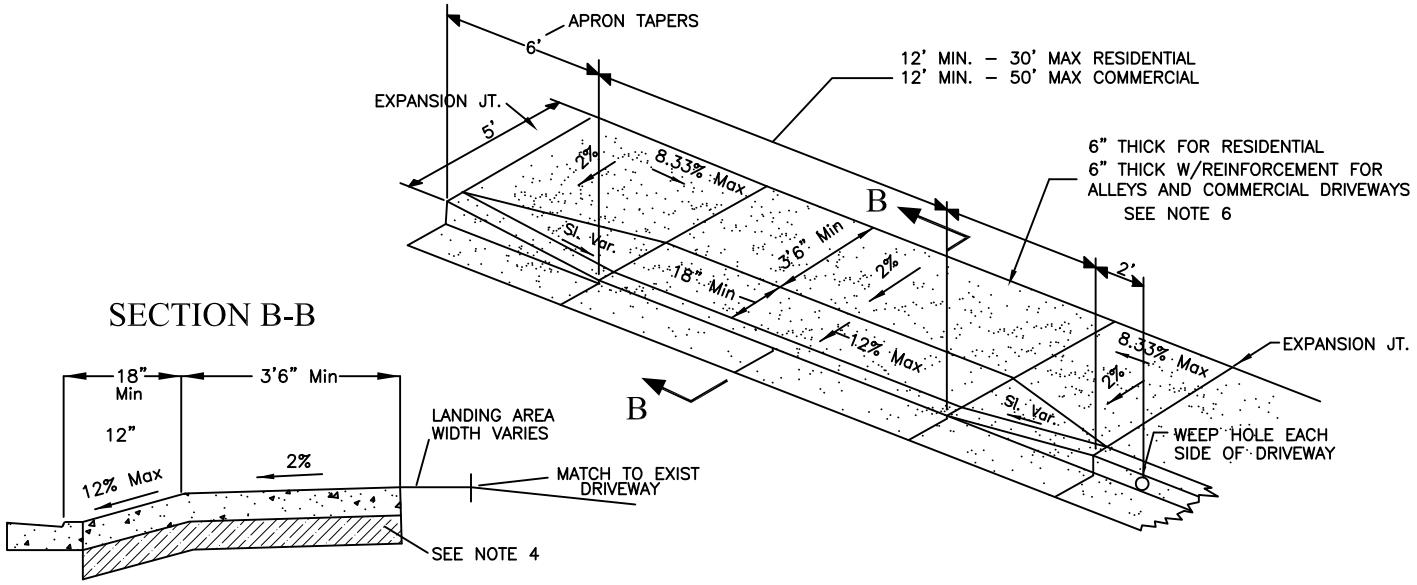


## PARTIALLY LOWERED DRIVEWAY/ ALLEY APPROACH

NOTES:

1. RESIDENTIAL DRIVEWAYS AND SIDEWALK SECTIONS THROUGH DRIVEWAYS SHALL HAVE A NOMINAL THICKNESS OF SIX INCHES OF CLASS 3300 PCC.
2. CONCRETE FOR COMMERCIAL USE APRONS AND ALLEY APPROACHES SHALL HAVE A NOMINAL THICKNESS OF 6" CLASS 3300 PCC.
3. CURB TRANSITIONS FOR COMMERCIAL USE AND ALLEY APPROACHES SHALL BE 5 FEET.
4. GRANULAR MATERIAL UNDER SIDEWALKS & DRIVEWAYS SHALL BE 3/4"–0 CRUSHED ROCK COMPACTED TO 95% AASHTO T180–D
   A. 4" MIN. THICKNESS UNDER SIDEWALKS
   B. 6" MIN. THICKNESS UNDER DRIVEWAYS
5. PCC APRONS SHALL BE JOINTED IN ACCORDANCE WITH DRAWING A–5A.
6. ALL COMMERCIAL SIDEWALKS AND DRIVEWAYS SHALL BE MINIMUM 6" THICK WITH NO. 4 REBAR @ 16–INCH O.C. GRID

FILE: CP–A–6A.DWG

| | | | | |
|---|---|---|---|---|
| CENTRAL POINT — *CITY OF* *CENTRAL POINT* *PUBLIC WORKS DEPARTMENT* | UNIFORM STANDARDS FOR PUBLIC WORKS CONSTRUCTION | CHECKED | DATE | A-6A |
| | DRIVEWAY AND ALLEY APPROACHES | APPROVED | DATE | |
| | | REVISED | DATE | DRAWING No. |

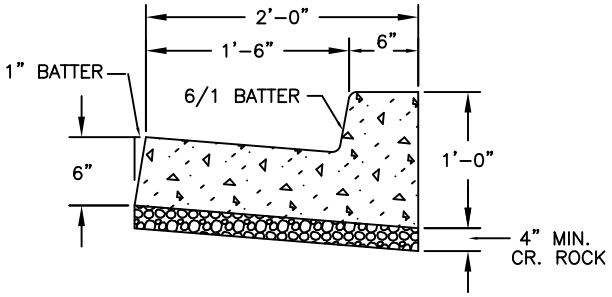


## STANDARD CURB AND GUTTER

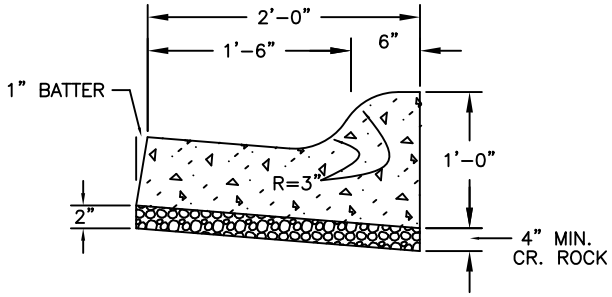


## ROLLED CURB AND GUTTER

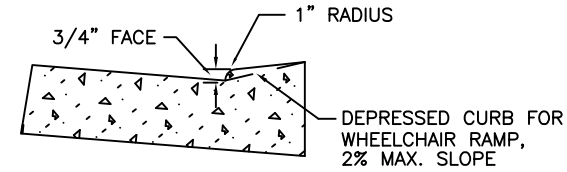


(OTHER DIMENSIONS SAME AS STANDARD CURB)

## DROPPED CURB AT DRIVEWAYS

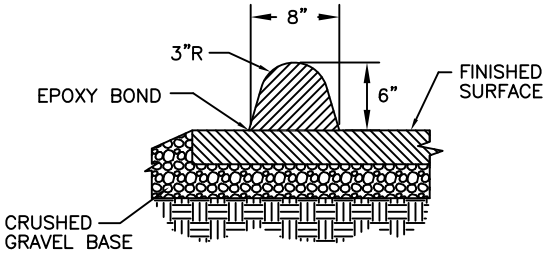


## EXTRUDED AC BONDED CURB

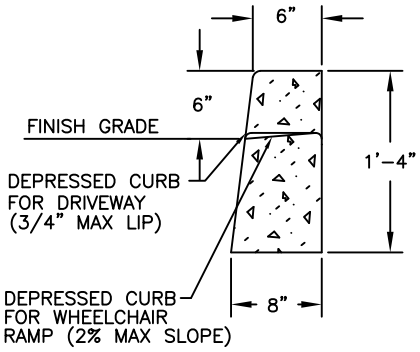


## STRAIGHT CURB

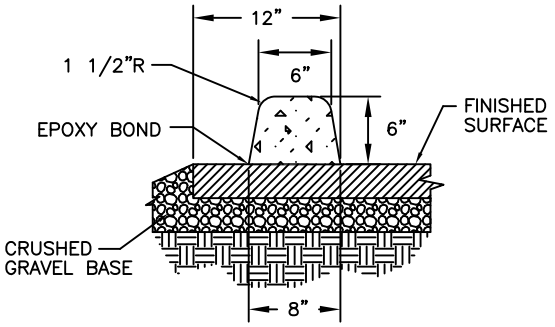


## EXTRUDED CONCRETE BONDED CURB

NOTES:

1. ALL RADII SHALL BE 3/4" EXCEPT AS OTHERWISE SHOWN.
2. ISOLATION JOINTS SHALL BE PLACED ONLY AS SPECIFIED.
3. CONTROL JOINTS SHALL BE PLACED AT 10' INTERVALS AND SHALL EXTEND AT LEAST 50% THROUGH THE CURB OR CURB AND GUTTER.
4. A CONTROL JOINT SHALL BE PLACED ALONG AND OVER WEEP HOLE THROUGH THE CURB AND THROUGH THE SIDEWALK.
5. WHEN SIDEWALKS ARE CONSTRUCTED, EXTEND 3" PIPE TO BACK OF SIDEWALK AND INSTALL COUPLING.

FILE: CP-A-6B.DWG

| | | | | | |
|---|---|---|---|---|---|
| CENTRAL POINT | *CITY OF* *CENTRAL POINT* *PUBLIC WORKS DEPARTMENT* | UNIFORM STANDARDS FOR PUBLIC WORKS CONSTRUCTION | CHECKED | DATE | A-6B |
| | | TYPICAL CURBS & GUTTERS | APPROVED | DATE | |
| | | | REVISED | DATE | DRAWING No. |

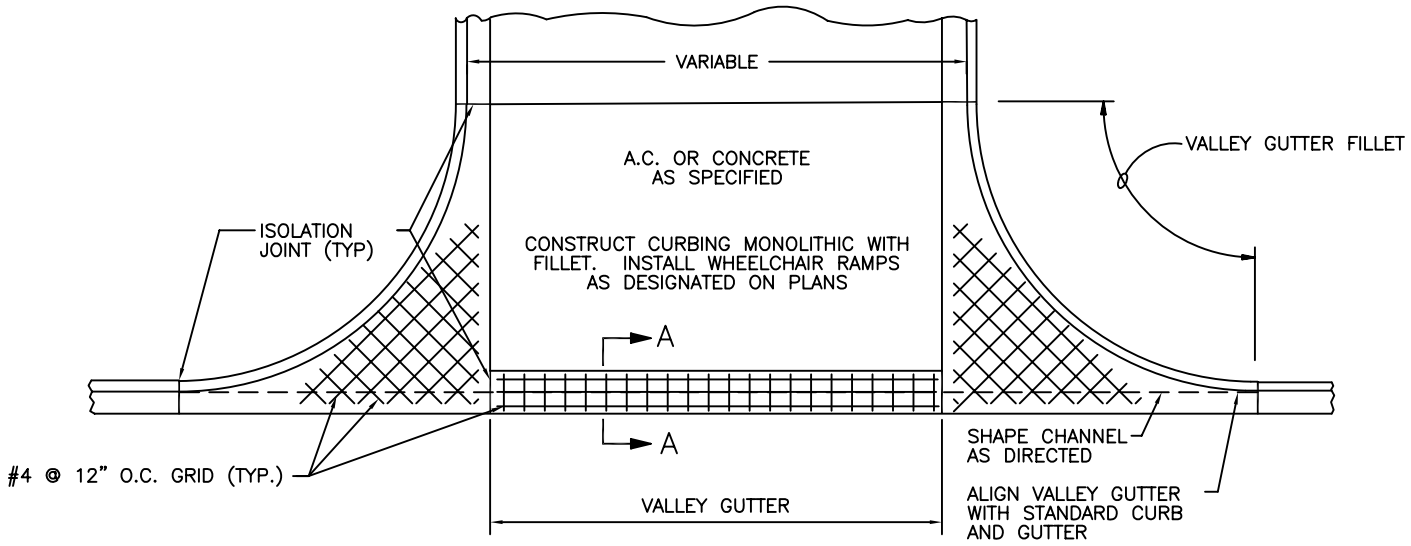


## PLAN VIEW
## VALLEY GUTTER ACROSS INTERSECTION

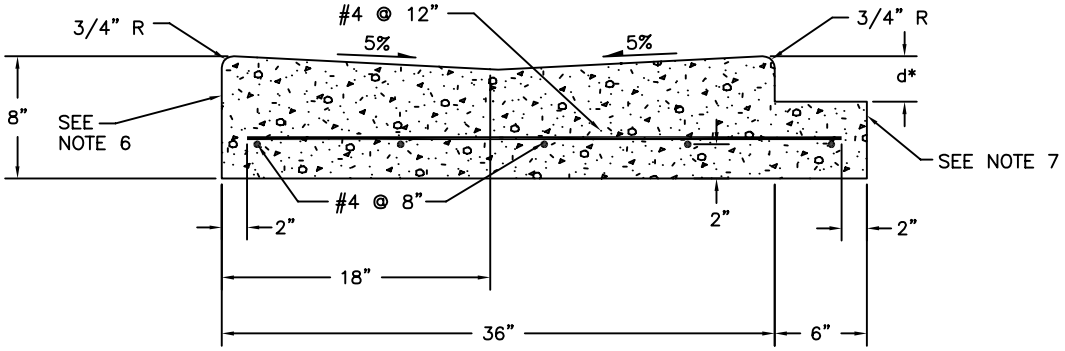


## SECTION A-A SYMMETRICAL "V" TYPE GUTTER

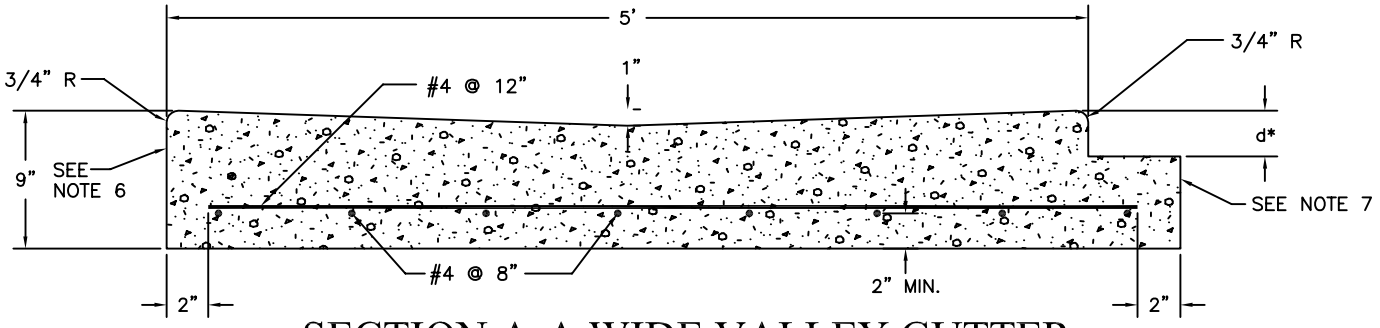


## SECTION A-A WIDE VALLEY GUTTER

NOTES:

1. d* = THICKNESS OF ASPHALT PAVING.
2. THE CONCRETE SHALL BE CLASS 3300.
3. THE TOTAL WIDTH OF THE NON-SYMMETRICAL "V" GUTTER MAY BE REDUCED TO 30" WHEN CONSTRUCTION WITH A CURB-EXTRUSION MACHINE.
4. CONSTRUCT 6" BENCH MONOLITHICALLY WITH VALLEY GUTTER TO EXTEND UNDER PAVING FOR PAVEMENT SUPPORT.
5. WHEN BENCH IS NOT REQUIRED, CONSTRUCT 1" BATTER ON VERTICAL FACE.
6. PLACE PREMOLDED FILLER AGAINST VERTICAL FACE WHERE VALLEY GUTTER ABUTS CONCRETE.
7. CONSTRUCT 6" x d DEPRESSED BENCH WHERE VALLEY GUTTER ABUTS ASPHALT PAVEMENT.
8. ORDER OF CONSTRUCTION:
   A. CONSTRUCT VALLEY GUTTER AND TRANSITION SECTIONS.
   B. CONSTRUCT 6" SIDEWALK ACROSS DRIVEWAY AREA.
   C. CONSTRUCT APRON.

FILE: CP-A-7.DWG

| | | | | |
|---|---|---|---|---|
| CENTRAL POINT<br>*CITY OF*<br>*CENTRAL POINT*<br>*PUBLIC WORKS DEPARTMENT* | UNIFORM STANDARDS<br>FOR<br>PUBLIC WORKS CONSTRUCTION<br>CONCRETE VALLEY GUTTER DETAILS | CHECKED | DATE | A-7<br>DRAWING No. |
| | | APPROVED | DATE | |
| | | REVISED | DATE | |

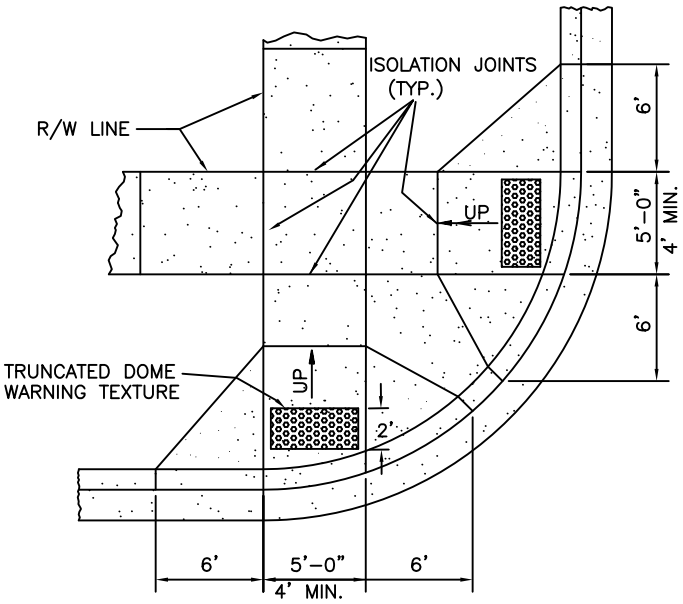


## END RAMPS FOR PROPERTY LINE SIDEWALKS

(COMMERCIAL AREAS OR ARTERIAL STREETS)

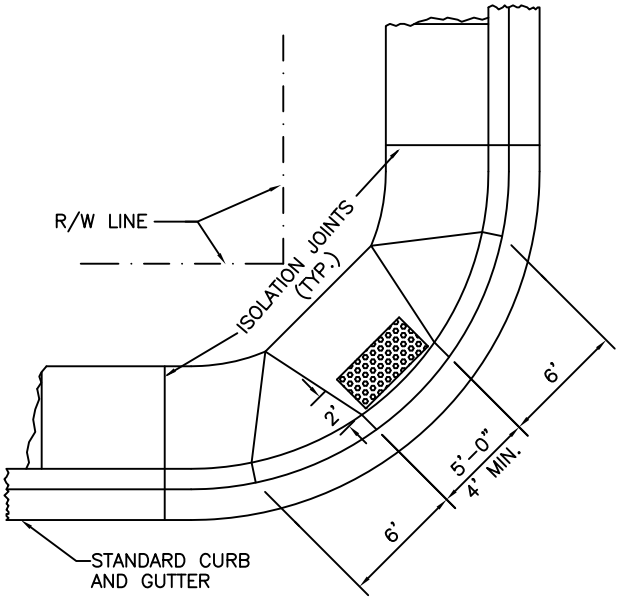


## CENTER RAMP FOR CURB LINE SIDEWALK

(RESIDENTIAL AREAS)

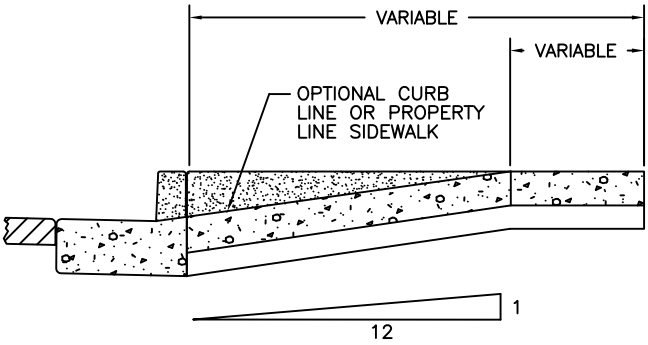


## SECTION THOUGH RAMP

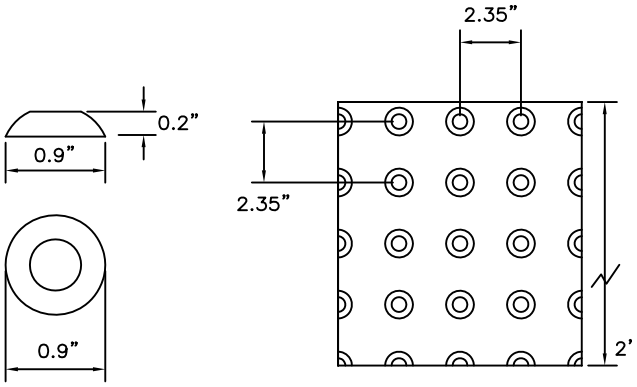


## TRUNCATED DOME AND RAMP TEXTURE PATTERN DETAIL

NOTES:

1. THE "AMERICANS WITH DISABILITIES ACT" REQUIRES THAT ACCESS RAMPS TO SIDEWALKS HAVE NO SLOPES GREATER THAN 12 HORIZONTAL TO 1 VERTICAL.
2. MIN. OF 4" OF 3/4"-0 CRUSHED ROCK UNDER SIDEWALKS AND RAMPS COMPACTED TO 95%
3. PCC SHALL BE 5.3 SACK, 3300 P.S.I.
4. PLACE TRUNCATED DOME WARNING TEXTURE IN THE LOWER 2' OF THROAT OF RAMP ONLY . ARRANGE DOMES USING IN-LINE PATTERN ONLY AS SHOWN IN DETAIL. COLOR OF TEXTURE TO BE SAFETY RED.

FILE: CP-A-8.DWG

| | | | | |
|---|---|---|---|---|
| CENTRAL POINT — *CITY OF* *CENTRAL POINT* *PUBLIC WORKS DEPARTMENT* | UNIFORM STANDARDS FOR PUBLIC WORKS CONSTRUCTION | B (REVISION) | 5/05 (DATE) | A-8 (DRAWING No.) |
| | WHEELCHAIR & BICYCLE RAMPS | | | |

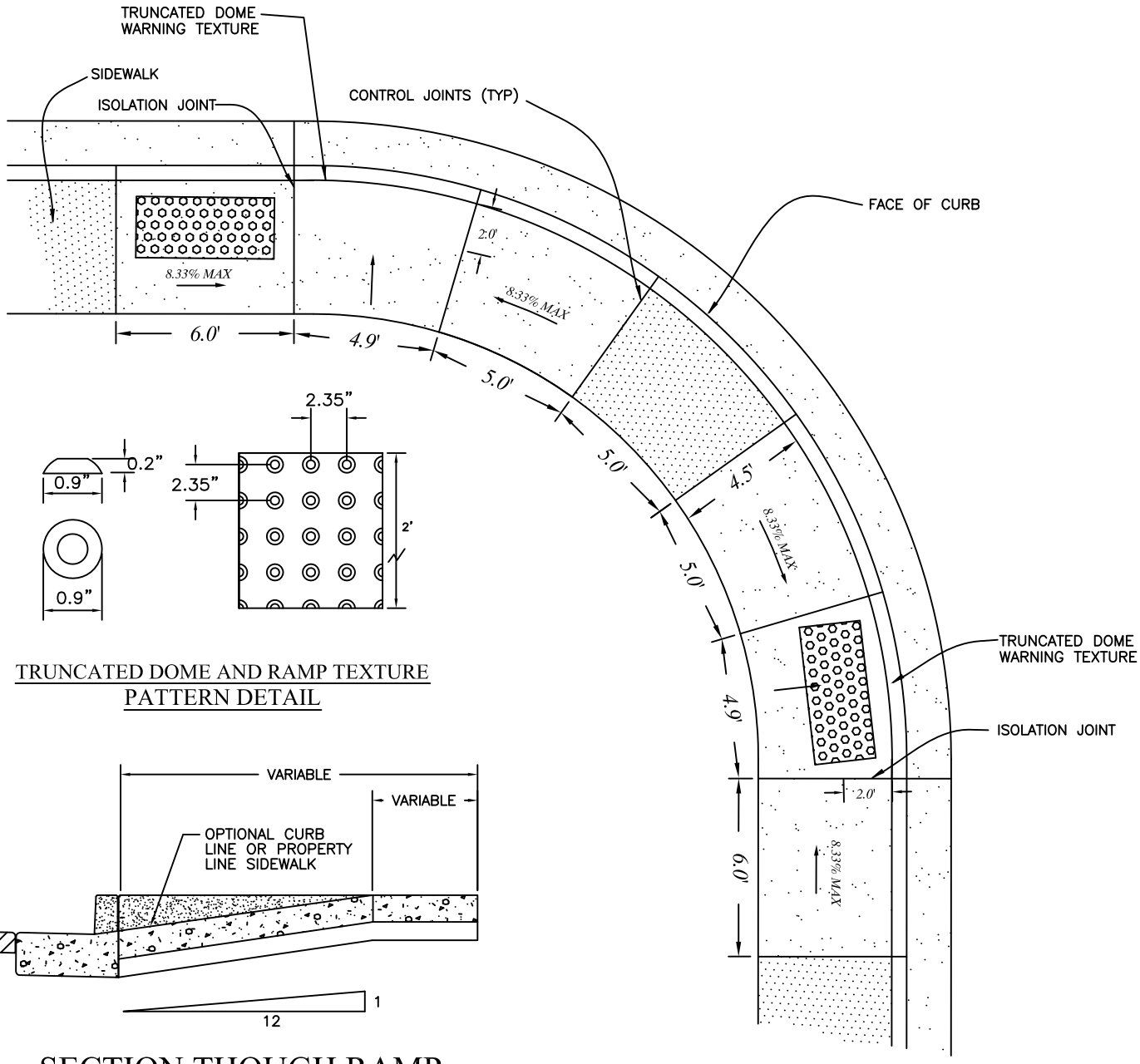


TRUNCATED DOME AND RAMP TEXTURE PATTERN DETAIL

SECTION THOUGH RAMP

# TYPICAL WHEELCHAIR RAMP DETAIL

NO SCALE

NOTES:

1. THE "AMERICANS WITH DISABILITIES ACT" REQUIRES THAT ACCESS RAMPS TO SIDEWALKS HAVE NO SLOPES GREATER THAN 12 HORIZONTAL TO 1 VERTICAL.
2. MIN. OF 4" OF 3/4"–0 CRUSHED ROCK UNDER SIDEWALKS AND RAMPS COMPACTED TO 95%
3. PCC SHALL BE 5.3 SACK, 3300 P.S.I.
4. PLACE TRUNCATED DOME WARNING TEXTURE IN THE LOWER 2' OF THROAT OF RAMP ONLY . ARRANGE DOMES USING IN–LINE PATTERN ONLY AS SHOWN IN DETAIL. COLOR OF TEXTURE TO BE SAFETY RED.

FILE: CP–A–9.DWG

| | | | | |
|---|---|---|---|---|
| CENTRAL POINT — CITY OF CENTRAL POINT PUBLIC WORKS DEPARTMENT | UNIFORM STANDARDS FOR PUBLIC WORKS CONSTRUCTION | B | 5/05 | A-9 |
| | WHEELCHAIR & BICYCLE RAMP | REVISION | DATE | DRAWING No. |

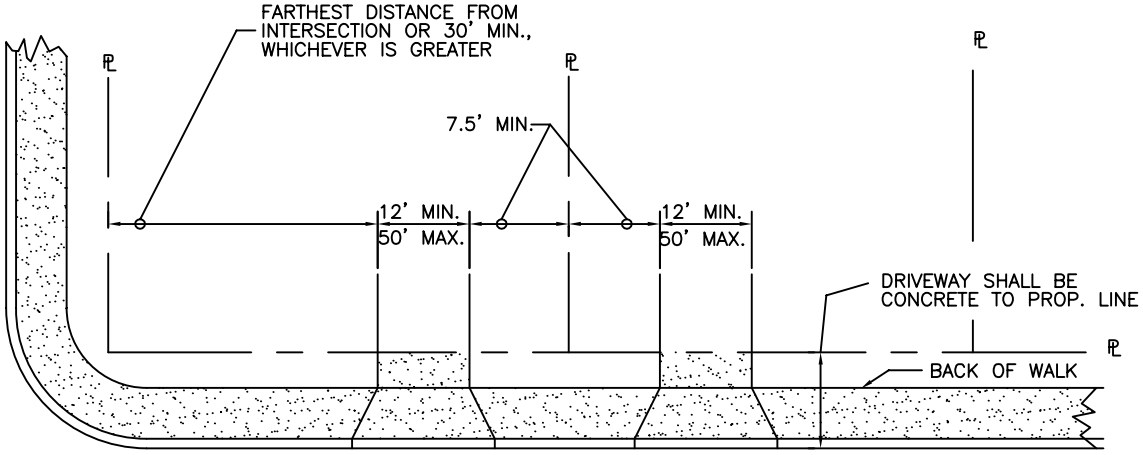


## SINGLE AND MULTI FAMILY

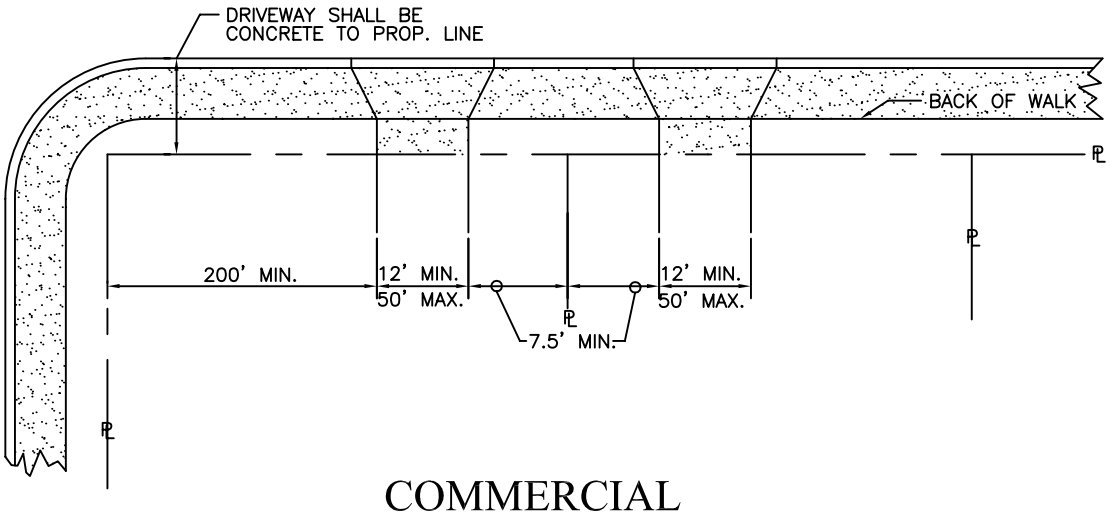


## COMMERCIAL

FILE: CP-A-10.DWG

| | | | | |
|---|---|---|---|---|
| CENTRAL POINT — *CITY OF* *CENTRAL POINT* *PUBLIC WORKS DEPARTMENT* | UNIFORM STANDARDS FOR PUBLIC WORKS CONSTRUCTION | CHECKED | DATE | A-10 |
| | MINIMUM ACCESS SPACING | APPROVED | DATE | |
| | | REVISED | DATE | DRAWING No. |

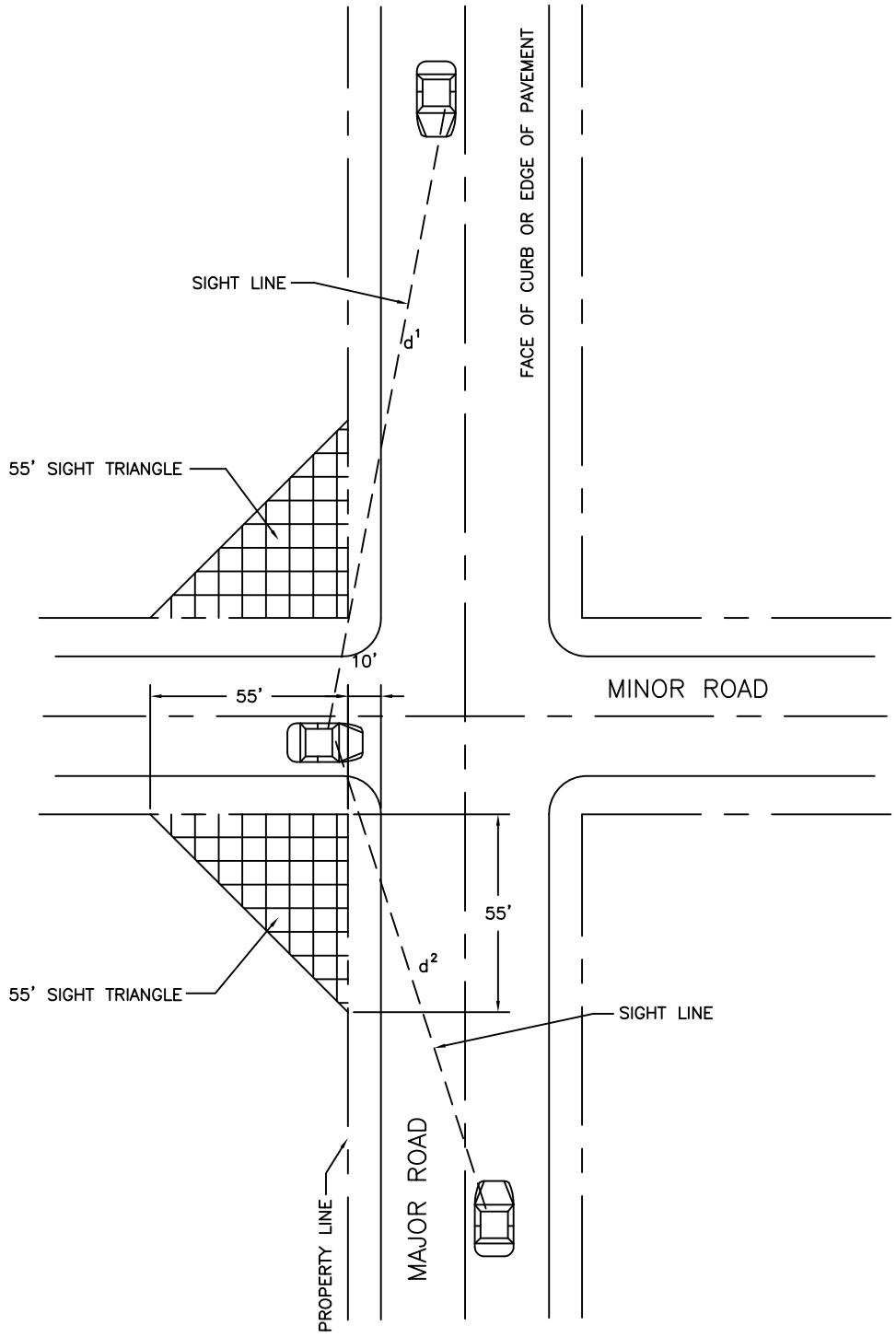


NOTE:
FOR SIGHT LINE DISTANCES $d^1$ AND $d^2$
SEE: TABLE 300-7 "CLEAR VISION AREAS" FOR STREET TYPES IN
CITY OF CENTRAL POINT PUBLIC WORKS STANDARD SPECIFICATIONS
42" VERTICAL ITEMS MAY BE ALLOWED INSIDE TRIANGLE-MEASURED FROM CURB HEIGHT

FILE: CP-A-11.DWG

| | | | | |
|---|---|---|---|---|
| CENTRAL POINT — *CITY OF* *CENTRAL POINT* *PUBLIC WORKS DEPARTMENT* | UNIFORM STANDARDS FOR PUBLIC WORKS CONSTRUCTION | CHECKED | DATE | A-11 |
| | SIGHT DISTANCE | APPROVED | DATE | |
| | | REVISED | DATE | DRAWING No. |

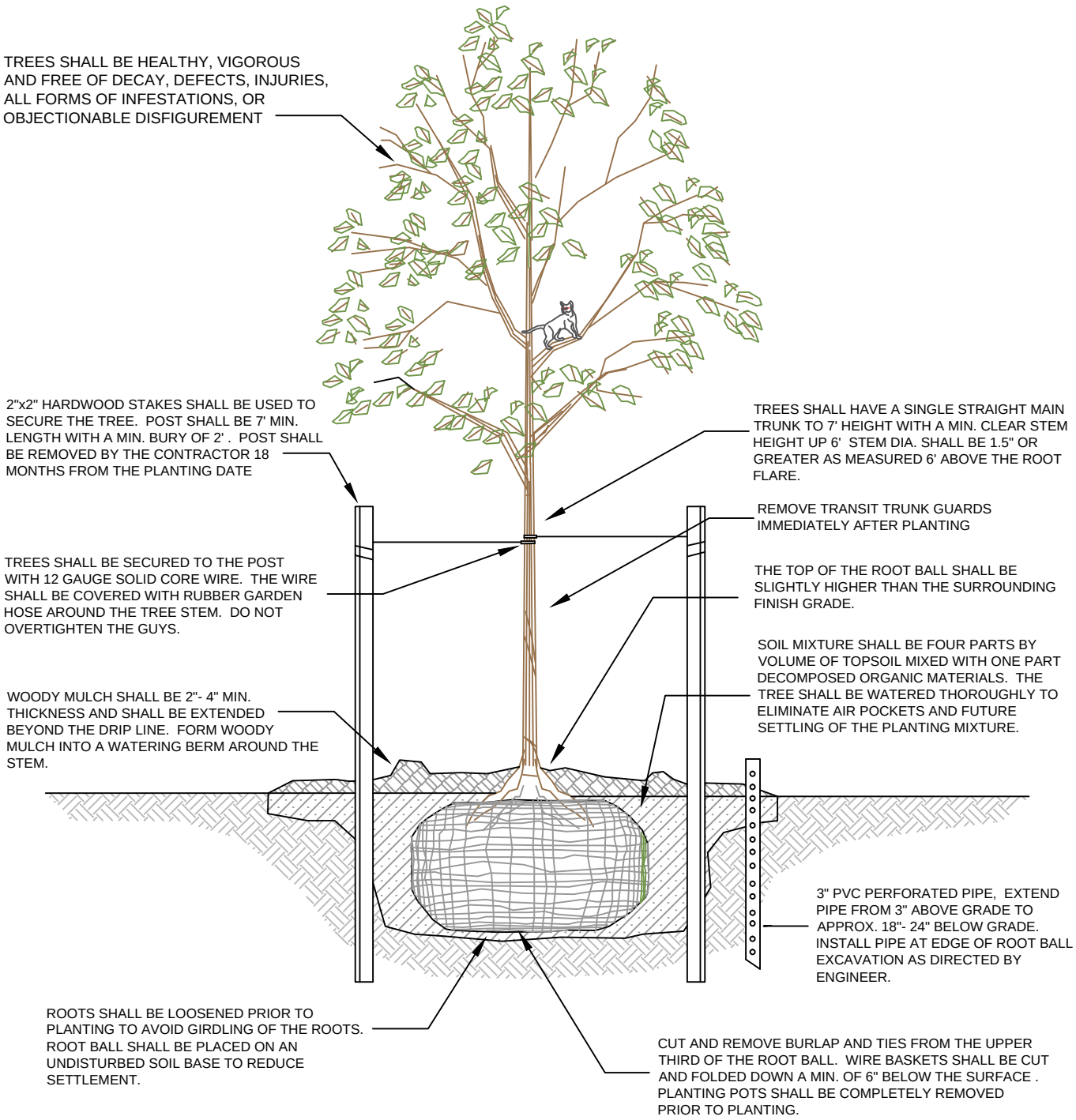


# STREET TREE PLANTING DETAIL

NO SCALE

NOTES:

1. ALL TREES SHALL BE AN APPROVED SPECIES AND VARIETY BY THE PUBLIC WORKS DEPARTMENT.

FILE: CP-E-1.DWG

| | | | | |
|---|---|---|---|---|
| CENTRAL POINT — *CITY OF* *CENTRAL POINT* *PUBLIC WORKS DEPARTMENT* | UNIFORM STANDARDS FOR PUBLIC WORKS CONSTRUCTION | CHECKED | DATE | A-12 |
| | STREET TREE PLANTING DETAIL | APPROVED | DATE | |
| | | REVISED | DATE | DRAWING No. |

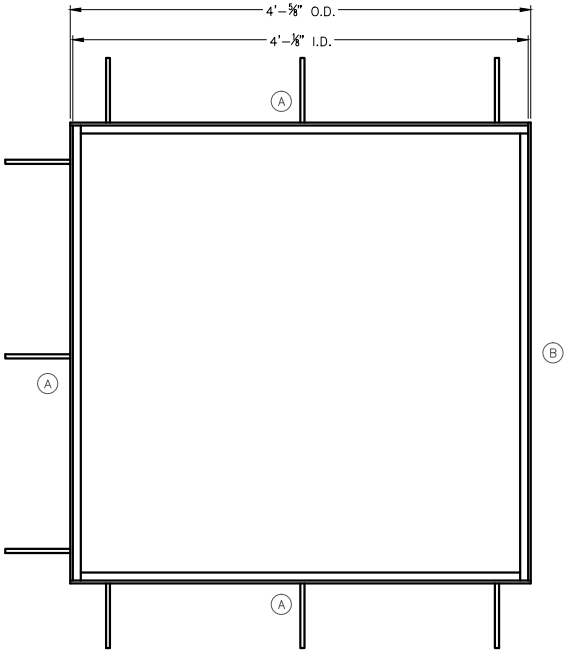


PLAN

MANUFACTURE:

4' SQUARE FAN TREE GRATE

URBAN ACCESSORIES
Founded 1972
465 E. FIFTEENTH ST.
TACOMA, WA 98421
(877) 487-0488
sales@urbanaccessories.com
www.urbanaccessories.com

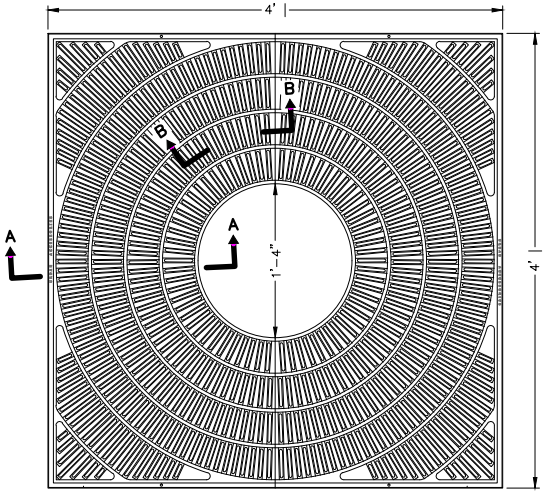


PLAN

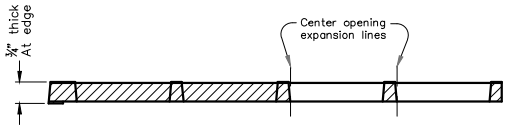


SECTION A–A

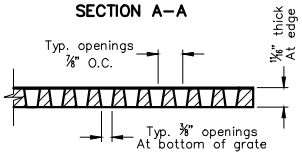


SECTION B–B

TREE GRATE DETAIL

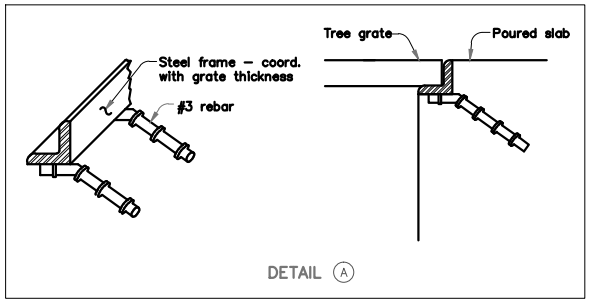


DETAIL A

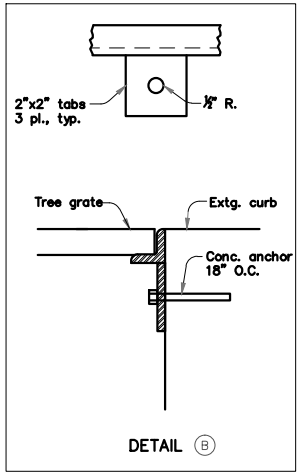


DETAIL B

FRAME DETAIL

# Tree Grate

*NOT TO SCALE*

*NOTES*

1. PAINT POWDER COATED BLACK

CITY OF
CENTRAL POINT
PUBLIC WORKS DEPARTMENT

UNIFORM STANDARDS
FOR
PUBLIC WORKS CONSTRUCTION

TREE GRATE

| CHECKED | DATE |
|---|---|
| APPROVED | DATE |
| REVISED | DATE |

DRAWING No. A-13

FILE: CP-A-13.DWG

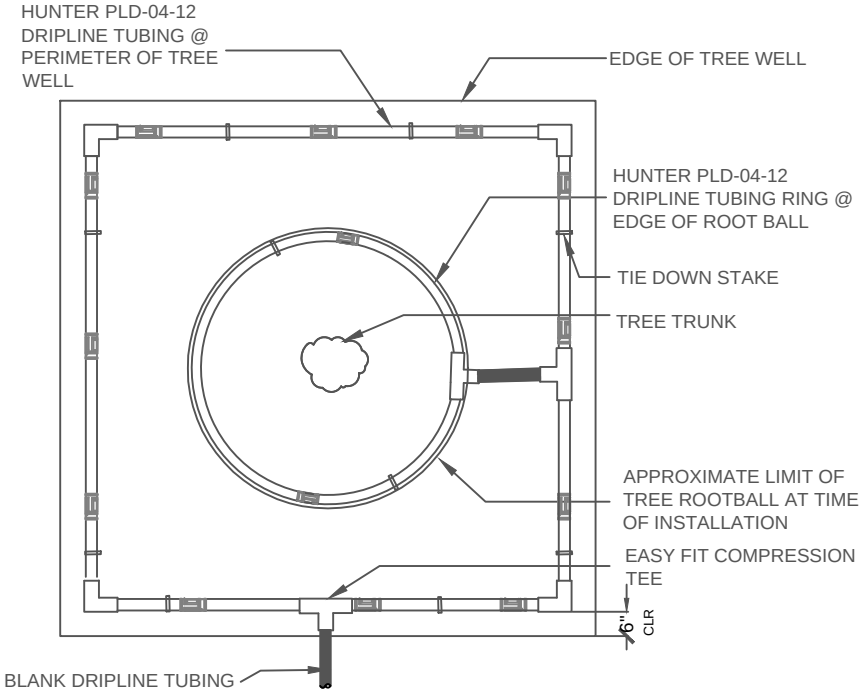


DRIPLINE TUBING AT STREET TREES

NTS

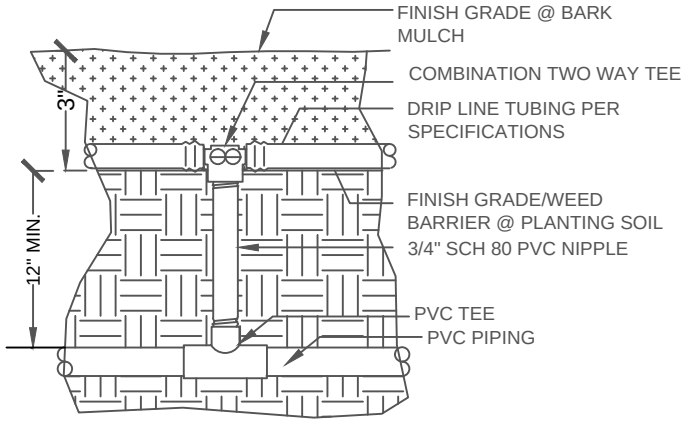


DRIP LINE SOURCE CONNECTION

NTS

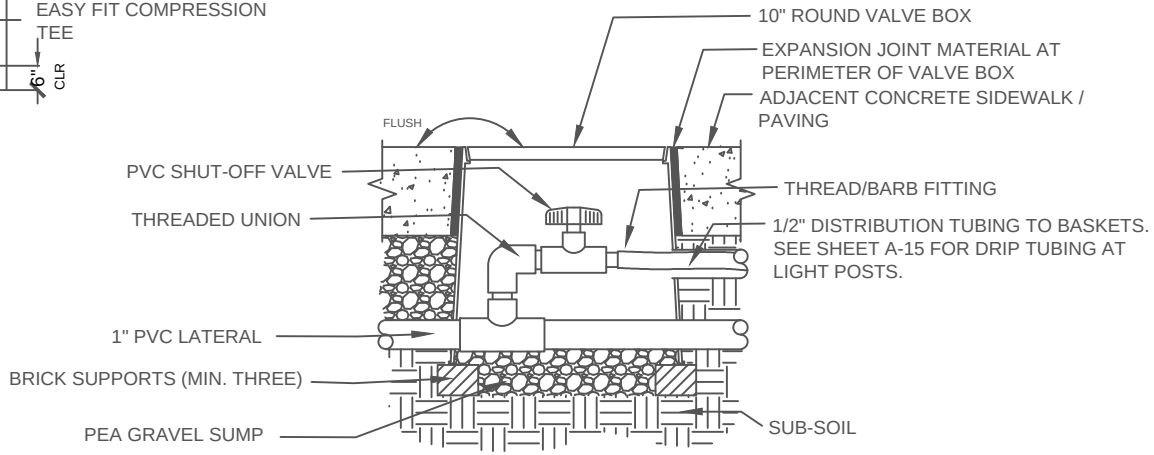


DRIP ASSEMBLY TO LIGHT POST

NTS

CITY OF
CENTRAL POINT
PUBLIC WORKS DEPARTMENT

UNIFORM STANDARDS
FOR
PUBLIC WORKS CONSTRUCTION

DRIPLINE DETAIL- TREEWELL

| REVISED | APPROVED | CHECKED |
|---|---|---|
| DATE | DATE | DATE |

DRAWING No. A-14

FILE: CP-A-14.DWG

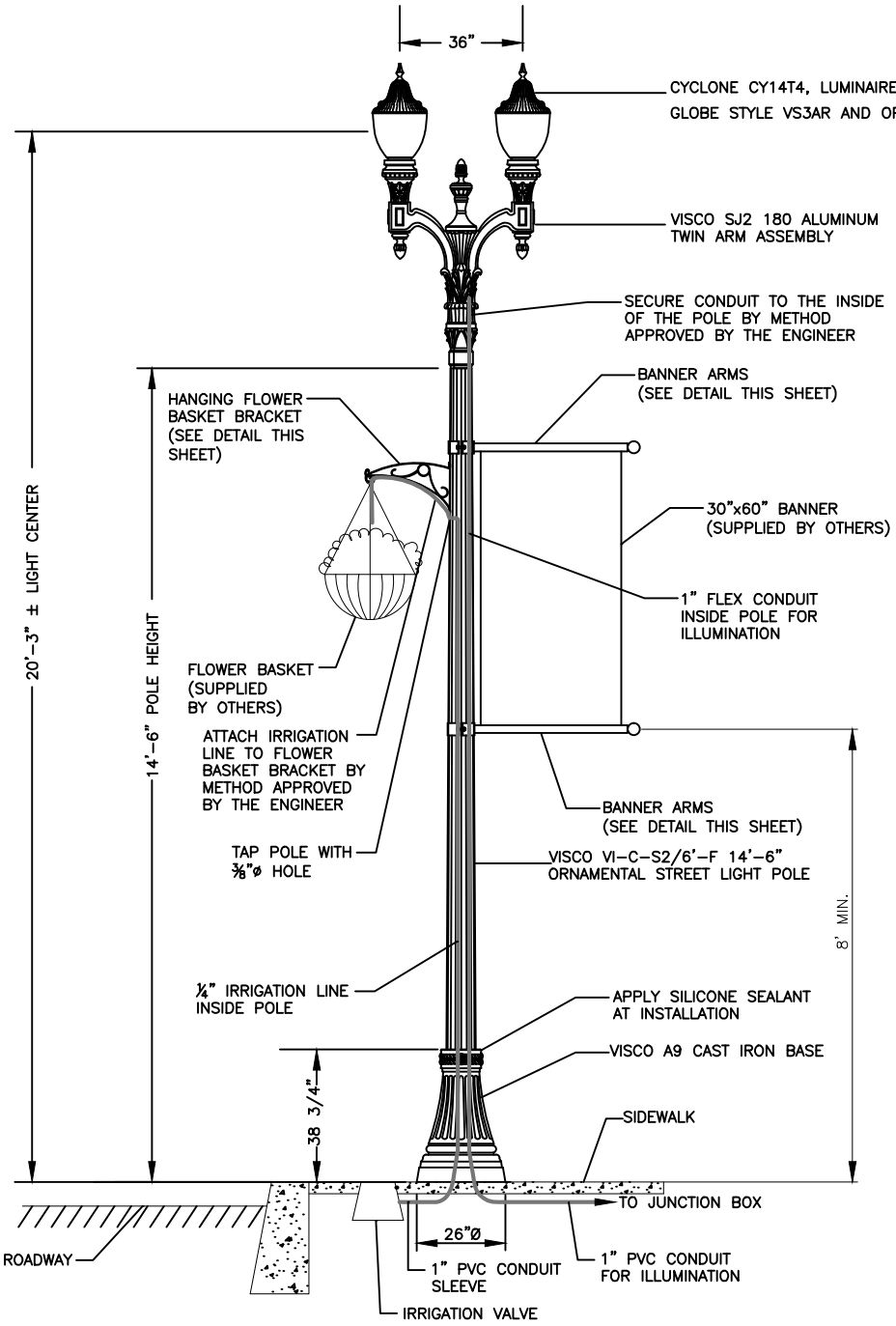


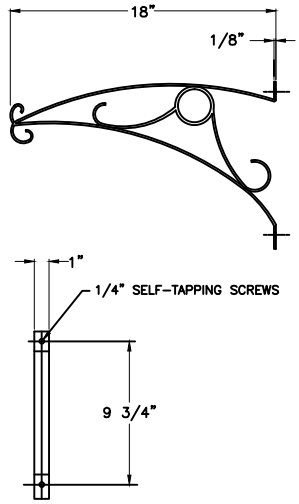


HANGING FLOWER BASKET BRACKET

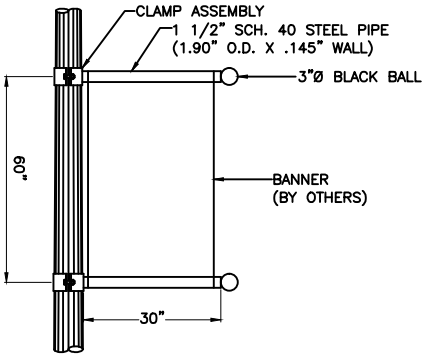


SINGLE BANNER ARM ARRANGEMENT

# Street Light Hanging Basket Detail

NTS

FILE: CP-A-15.DWG

| | | | | |
|---|---|---|---|---|
| CENTRAL POINT — *CITY OF* **CENTRAL POINT** *PUBLIC WORKS DEPARTMENT* | UNIFORM STANDARDS FOR PUBLIC WORKS CONSTRUCTION | CHECKED | DATE | A-15 |
| | Street Light Hanging Basket Detail | APPROVED | DATE | |
| | | REVISED | DATE | DRAWING No. |

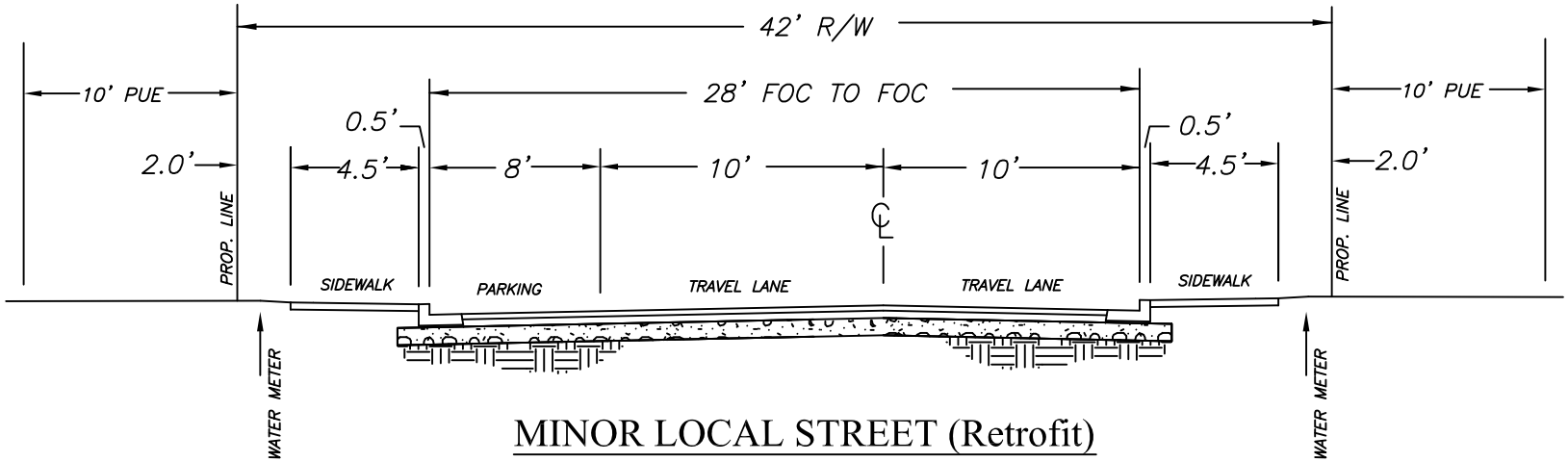


## MINOR LOCAL STREET (Retrofit)

W/ PARKING ON ONE SIDE

NOT TO SCALE

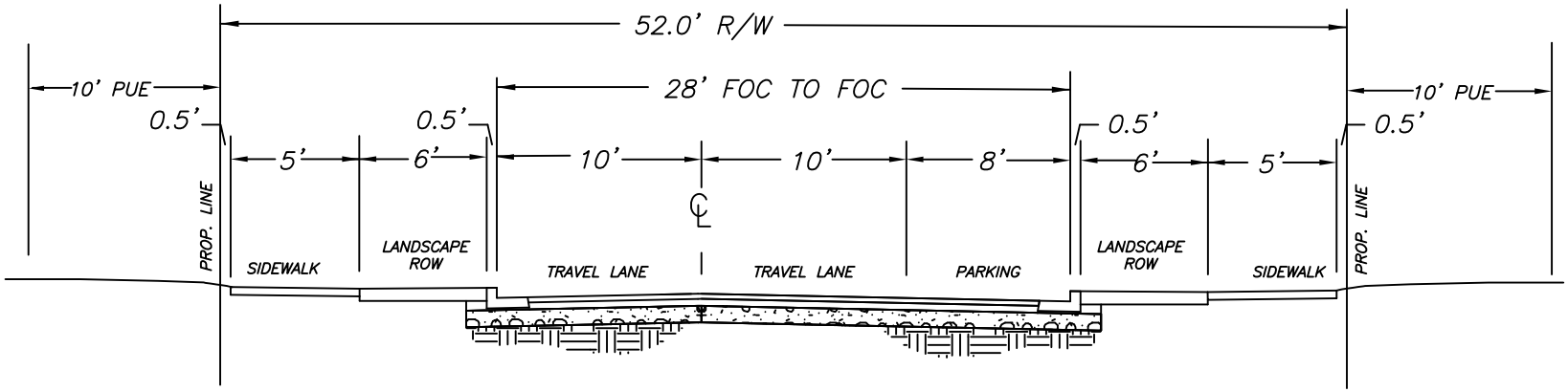


## MINOR RESIDENTIAL LOCAL STREET

W/PARKING ON ONE SIDE AND LANDSCAPE ROWS

NOT TO SCALE

*NOTES*

1. SEE TABLE 300-3 FOR MINIMUM STREET SECTION REQUIREMENTS.
2. SEE TABLE 300-1D FOR WIDTHS AND RIGHT OF WAY REQUIREMENTS.
3. TRANSVERSE GRADE ARE 3%.

CENTRAL POINT

CITY OF
CENTRAL POINT
PUBLIC WORKS DEPARTMENT

UNIFORM STANDARDS
FOR
PUBLIC WORKS CONSTRUCTION

MINOR LOCAL STREETS

| REVISED | APPROVED | CHECKED |
|---|---|---|
| DATE | DATE | DATE |

DRAWING No. ST-10

FILE: CP-ST-10.DWG

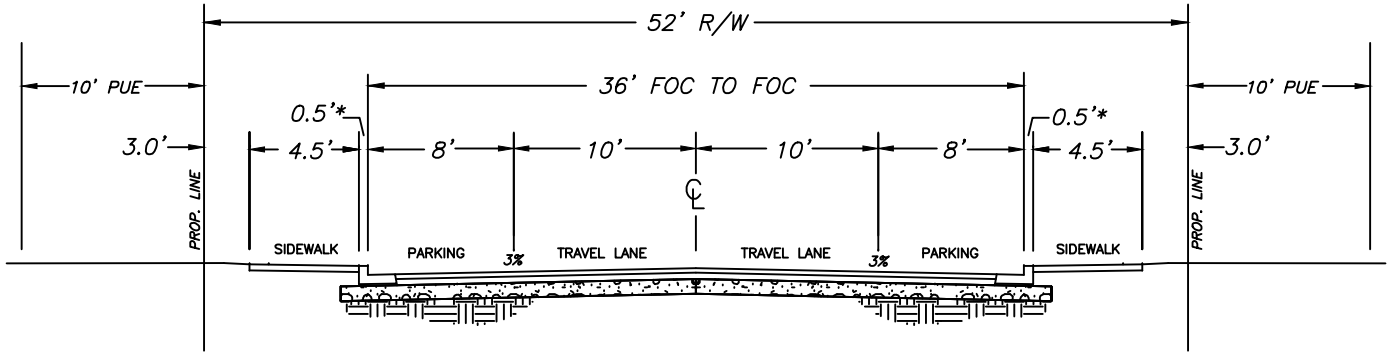


## STANDARD LOCAL STREET (RETROFIT)

W/0 LANDSCAPE ROWS

*NOT TO SCALE*

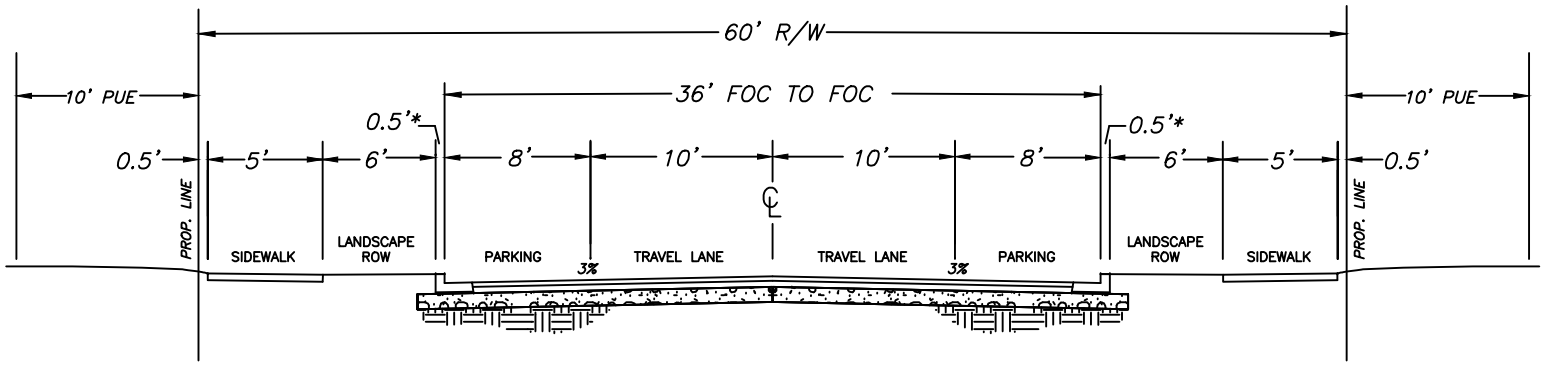


## STANDARD LOCAL STREET

W/LANDSCAPE ROWS

*NOT TO SCALE*

*NOTES*

1. SEE TABLE 300-3 FOR MINIMUM STREET SECTION REQUIREMENTS.
2. SEE TABLE 300-1C FOR WIDTHS AND RIGHT OF WAY REQUIREMENTS.
3. TRANSVERSE GRADE ARE 3%.

CENTRAL POINT

CITY OF
CENTRAL POINT
PUBLIC WORKS DEPARTMENT

UNIFORM STANDARDS
FOR
PUBLIC WORKS CONSTRUCTION

STANDARD LOCAL STREETS

| | | |
|---|---|---|
| 1 REVISED | APPROVED | CHECKED |
| 10/18/04 DATE | DATE | DATE |

DRAWING No. ST-15

FILE: CP-ST-15.DWG

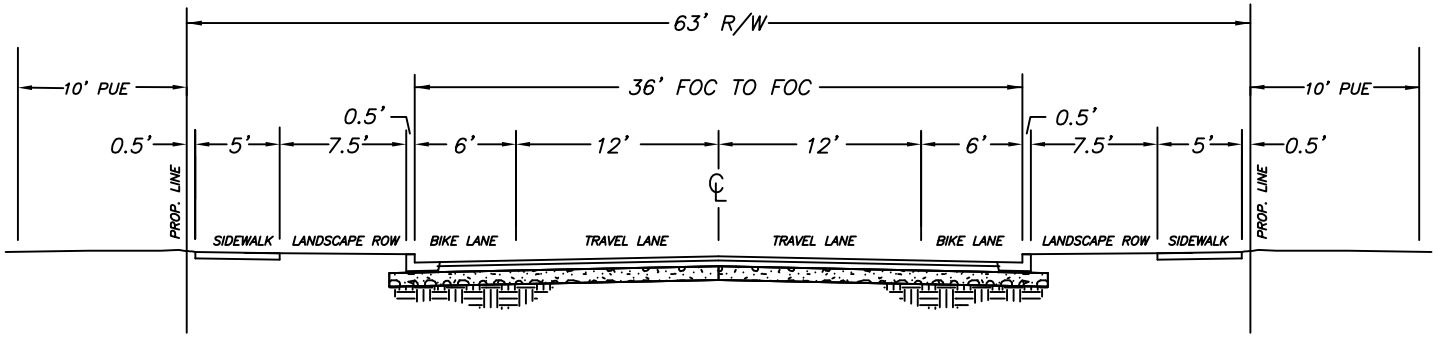


## 2 LANE COLLECTOR STREET (Retrofit)

W/BIKE LANES, W/O PARKING, W/LANDSCAPE ROWS

NOT TO SCALE

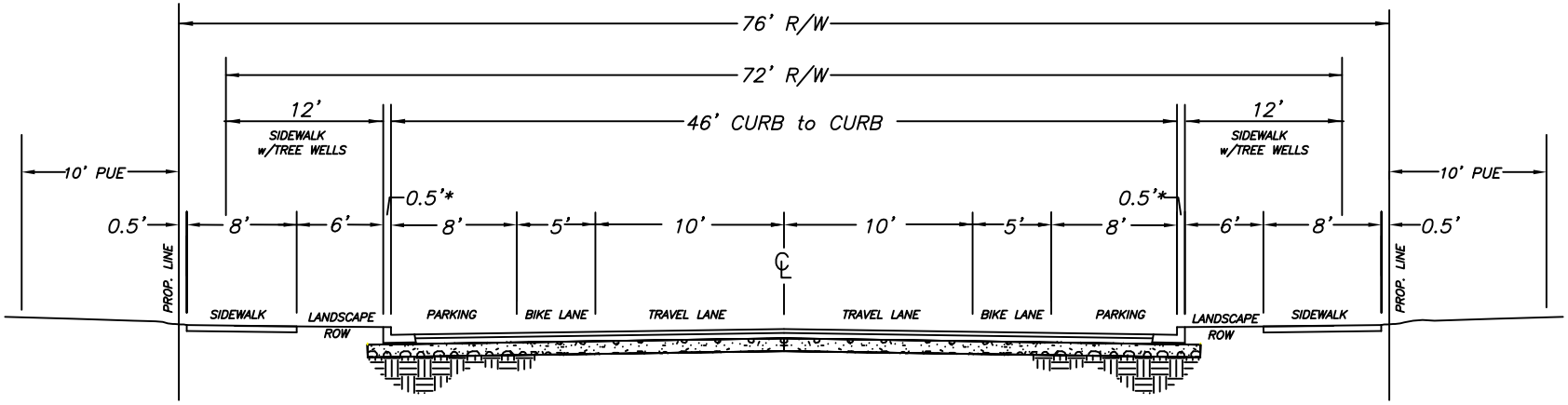


## 2 LANE COLLECTOR STREET

W/BIKE LANES, W/PARKING, W/LANDSCAPE ROW

NOT TO SCALE

*NOTES*

1. R-O-W WIDTH DOES NOT INCLUDE PARKING LANES, TRANSIT PULLOUT, OR DECELERATION/ ACCELERATION LANE REQUIREMENTS.
2. PUBLIC UTILITY EASEMENT WIDTHS ARE IN ADDITION TO R-O-W.
3. SEE TABLE 300-3 FOR MINIMUM STREET SECTION REQUIREMENTS.
4. SEE TABLE 300-1B FOR WIDTHS AND RIGHT OF WAY REQUIREMENTS.
5. TRANSVERSE GRADE ARE 3%.

CENTRAL POINT

CITY OF CENTRAL POINT
PUBLIC WORKS DEPARTMENT

UNIFORM STANDARDS FOR PUBLIC WORKS CONSTRUCTION

2 LANE COLLECTOR STREETS

| REVISED | APPROVED | CHECKED |
|---|---|---|
| DATE | DATE | DATE |
| 3/15/06 | | |

DRAWING No. ST-20

FILE: CP-ST-20.DWG

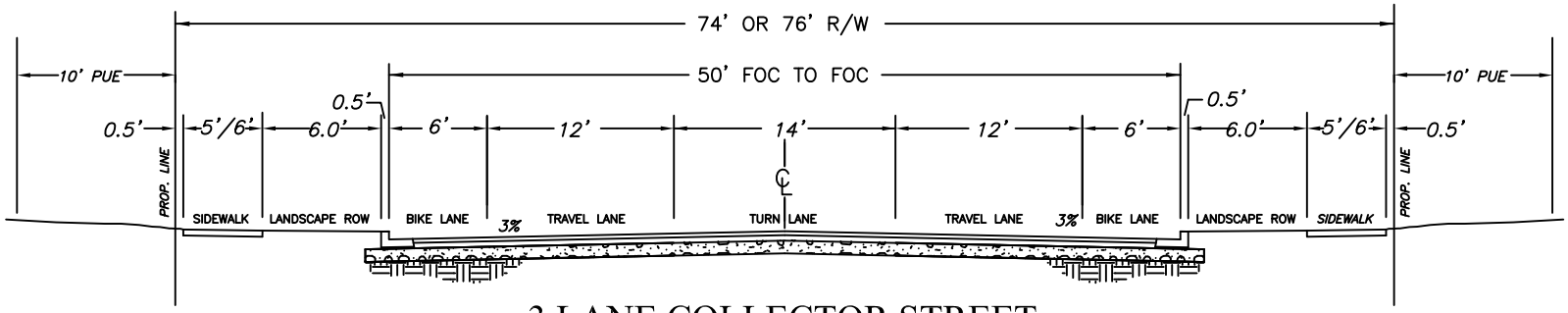


# 3 LANE COLLECTOR STREET

## W/BIKE LANES, W/O PARKING, W/LANDSCAPE ROWS

NOT TO SCALE

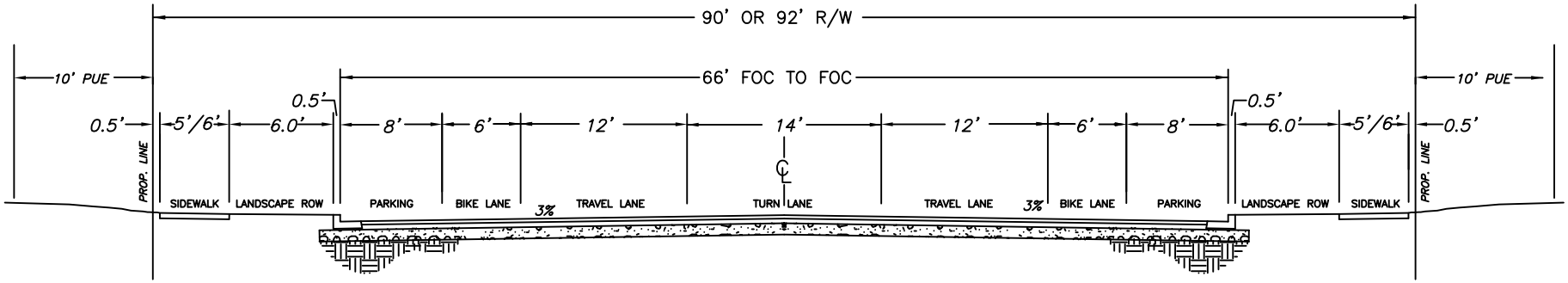


# 3 LANE COLLECTOR STREET

## W/BIKE LANES, W/PARKING (BOTH SIDES), W/LANDSCAPE ROWS

* 6-FOOT SIDEWALK SHALL BE USED IN COMMERCIAL, INDUSTRIAL, OR MIXED-USE APPLICATIONS.

*NOT TO SCALE*

NOTES

1. R-O-W WIDTH DOES NOT INCLUDE PARKING LANES, TRANSIT PULLOUT, OR DECELERATION/ACCELERATION LANE REQUIREMENTS.
2. PUBLIC UTILITY EASEMENT WIDTHS ARE IN ADDITION TO R-O-W.
3. SEE TABLE 300-3 FOR MINIMUM STREET SECTION REQUIREMENTS.
4. SEE TABLE 300-1B FOR WIDTHS AND RIGHT OF WAY REQUIERMENTS.
5. TRANSVERSE GRADE ARE 3%.

CENTRAL POINT

CITY OF
CENTRAL POINT
PUBLIC WORKS DEPARTMENT

UNIFORM STANDARDS
FOR
PUBLIC WORKS CONSTRUCTION

3 LANE COLLECTOR STREETS

CHECKED DATE
APPROVED DATE
REVISED DATE

ST-21
DRAWING No.

FILE: CP-ST-21.DWG

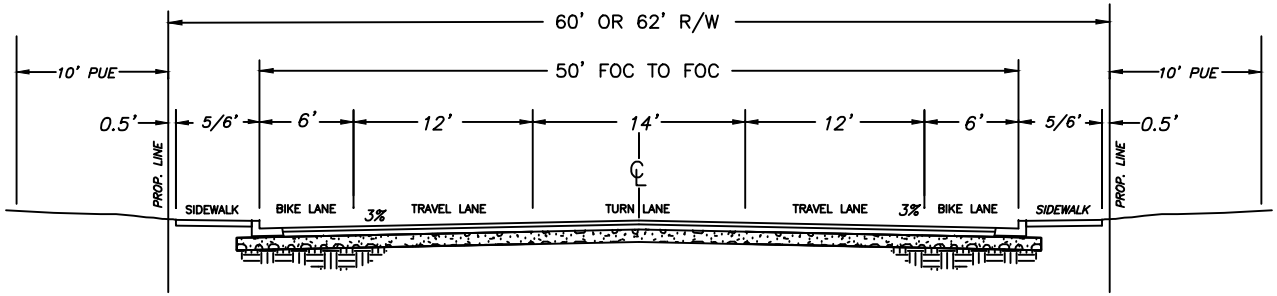


## 3 LANE COLLECTOR STREET

W/BIKE LANES, W/O PARKING
(RETROFIT ONLY)
NOT TO SCALE

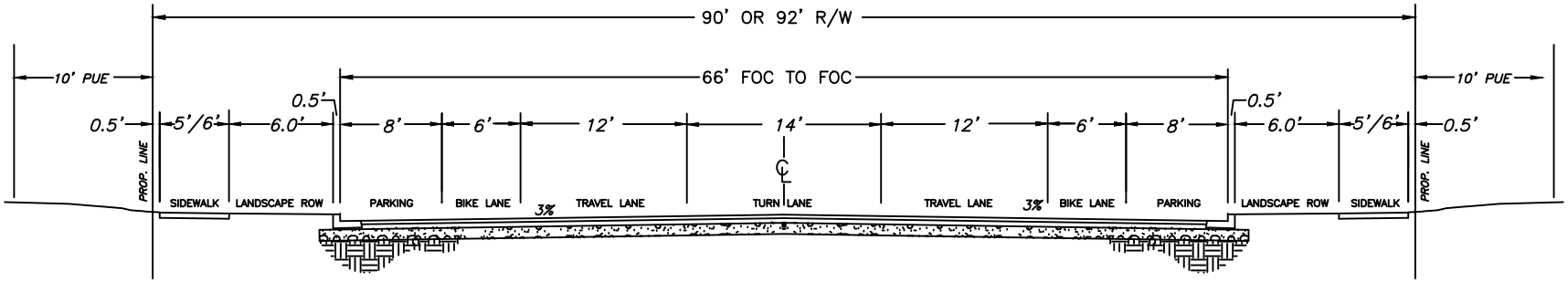


## 3 LANE COLLECTOR STREET

W/BIKE LANES, W/PARKING (BOTH SIDES), W/LANDSCAPE ROWS

* 6-FOOT SIDEWALK SHALL BE USED IN COMMERCIAL, INDUSTRIAL, OR MIXED-USE APPLICATIONS.

*NOT TO SCALE*

NOTES

1. R-O-W WIDTH DOES NOT INCLUDE PARKING LANES, TRANSIT PULLOUT, OR DECELERATION/ACCELERATION LANE REQUIREMENTS.
2. PUBLIC UTILITY EASEMENT WIDTHS ARE IN ADDITION TO R-O-W.
3. SEE TABLE 300-3 FOR MINIMUM STREET SECTION REQUIREMENTS.
4. SEE TABLE 300-1B FOR WIDTHS AND RIGHT OF WAY REQUIERMENTS.
5. TRANSVERSE GRADE ARE 3%.

FILE: CP-ST-21R.DWG

CITY OF
CENTRAL POINT
PUBLIC WORKS DEPARTMENT

UNIFORM STANDARDS
FOR
PUBLIC WORKS CONSTRUCTION

3 LANE COLLECTOR STREETS

| | | |
|---|---|---|
| MHO REVISED | APPROVED | CHECKED |
| 02/14 DATE | DATE | DATE |

DRAWING No. ST-21R

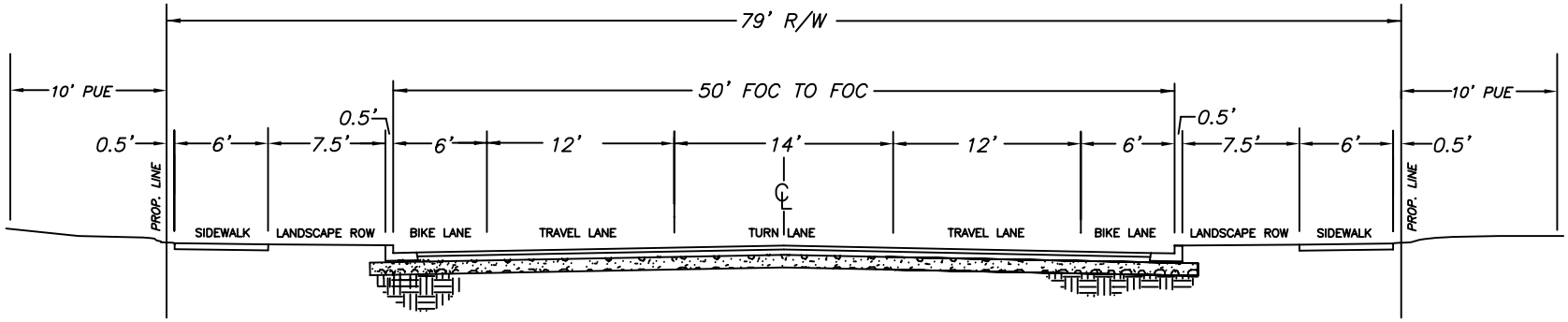


# 3 LANE MINOR ARTERIAL STREET

W/BIKE LANES, W/LANDSCAPE ROWS

(RETROFIT ONLY)

*NOT TO SCALE*

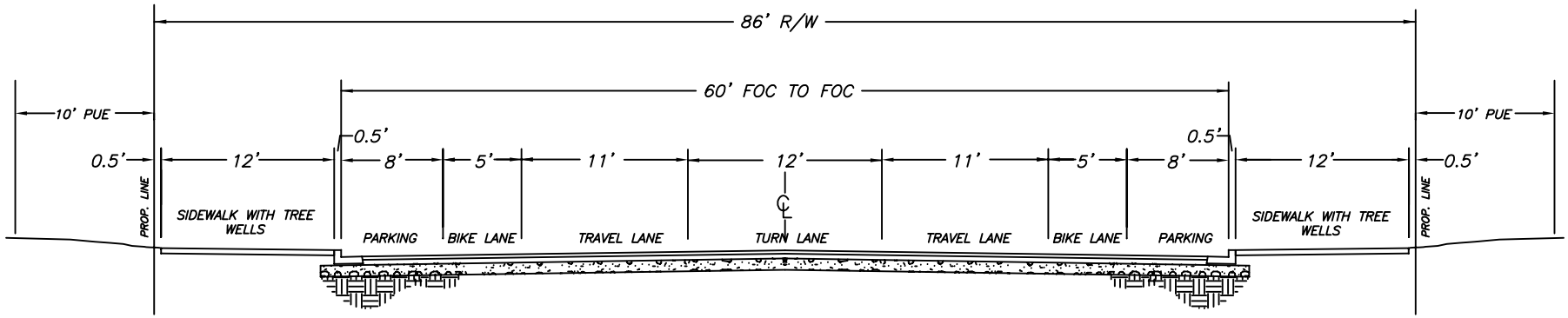


# 3 LANE MINOR ARTERIAL STREET

W/BIKE LANES, W/PARKING (BOTH SIDES), W/LANDSCAPE ROWS

*NOT TO SCALE*

*NOTES*

1. R-O-W WIDTH DOES NOT INCLUDE PARKING LANES, TRANSIT PULLOUT, OR DECELERATION/ ACCELERATION LANE REQUIREMENTS.
2. PUBLIC UTILITY EASEMENT WIDTHS ARE IN ADDITION TO R-O-W.
3. SEE TABLE 300-3 FOR MINIMUM STREET SECTION REQUIREMENTS.
4. SEE TABLE 300-1A FOR WIDTHS AND RIGHT OF REQUIREMENTS.
5. TRANSVERSE GRADE ARE 3%.

CITY OF CENTRAL POINT

PUBLIC WORKS DEPARTMENT

UNIFORM STANDARDS FOR PUBLIC WORKS CONSTRUCTION

3 LANE MINOR ARTERIAL STREETS

| REVISED | APPROVED | CHECKED |
|---|---|---|
| DATE | DATE | DATE |

DRAWING No. ST-30

FILE: CP-ST-30.DWG

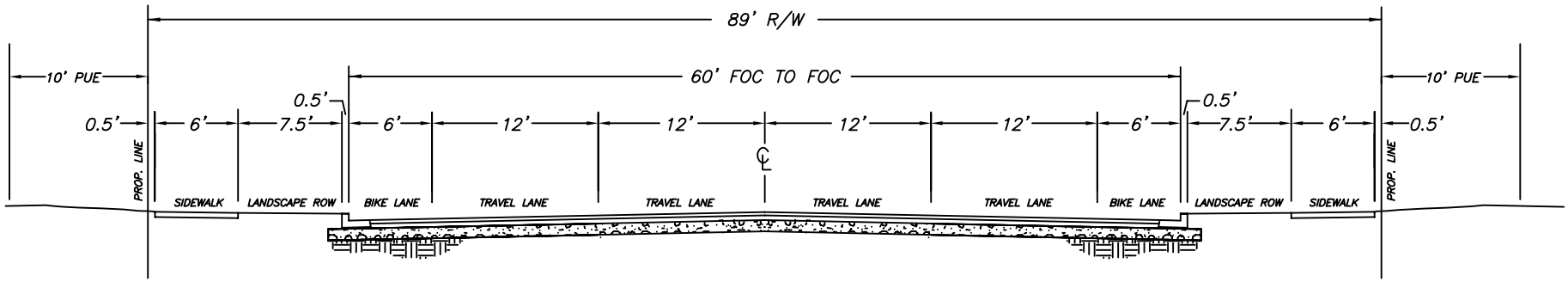


# 4 LANE ARTERIAL

W/BIKE LANES, W/LANDSCAPE ROWS

NOT TO SCALE

*NOTES*

1. R–O–W WIDTH DOES NOT INCLUDE PARKING LANES, TRANSIT PULLOUT, OR DECELERATION/ ACCELERATION LANE REQUIREMENTS.
2. PUBLIC UTILITY EASEMENT WIDTHS ARE IN ADDITION TO R–O–W.
3. SEE TABLE 300–3 FOR MINIMUM STREET SECTION REQUIREMENTS.
4. SEE TABLE 300–1A FOR WIDTHS AND RIGHT OF REQUIREMENTS.
5. TRANSVERSE GRADE ARE 3%.

CITY OF CENTRAL POINT
PUBLIC WORKS DEPARTMENT

UNIFORM STANDARDS FOR PUBLIC WORKS CONSTRUCTION

4 LANE MINOR ARTERIAL STREET

CHECKED DATE
APPROVED DATE
REVISED DATE

ST-31
DRAWING No.

FILE: CP–ST–31.DWG

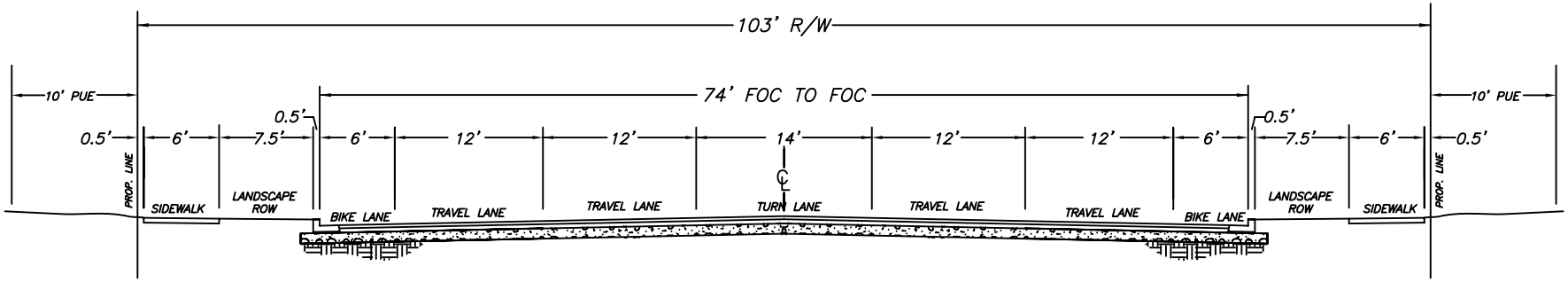


# 5 LANE ARTERIAL STREET

W/BIKE LANES, W/LANDSCAPE ROWS

*NOT TO SCALE*

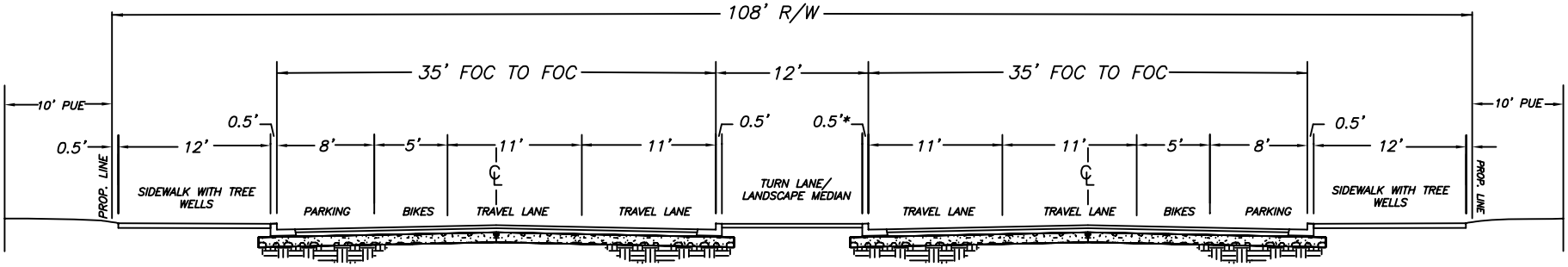


# 5 LANE ARTERIAL STREET

*NOT TO SCALE*

*NOTES*

1. R-O-W WIDTH DOES NOT INCLUDE PARKING LANES, TRANSIT PULLOUT, OR DECELERATION/ ACCELERATION LANE REQUIREMENTS.
2. PUBLIC UTILITY EASEMENT WIDTHS ARE IN ADDITION TO R-O-W.
3. SEE TABLE 300-3 FOR MINIMUM STREET SECTION REQUIREMENTS.
4. SEE TABLE 300-1A FOR WIDTHS AND RIGHT OF REQUIREMENTS.
5. TRANSVERSE GRADE ARE 3%.

CENTRAL POINT

CITY OF
CENTRAL POINT
PUBLIC WORKS DEPARTMENT

UNIFORM STANDARDS
FOR
PUBLIC WORKS CONSTRUCTION

5 LANE ARTERIAL STREETS

| | | |
|---|---|---|
| REVISED | APPROVED | CHECKED |
| DATE 3/15/06 | DATE | DATE |

DRAWING No. ST-32

FILE: CP-ST-32.DWG

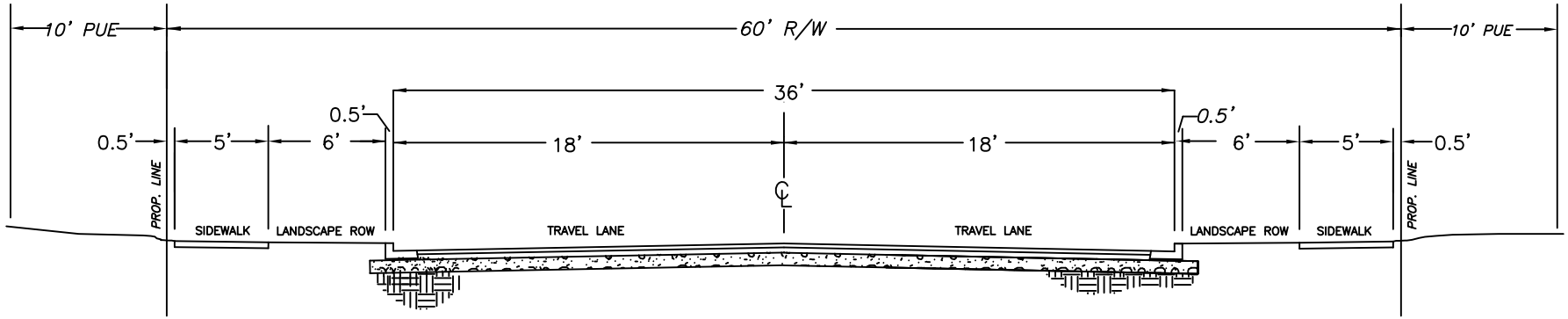


# INDUSTRIAL STREET

## W/LANDSCAPE ROWS

*NOT TO SCALE*

NOTES

1. R-O-W WIDTH DOES NOT INCLUDE TRANSIT PULLOUT, OR DECELERATION/ACCELERATION LANE REQUIREMENTS.
2. PUBLIC UTILITY EASEMENT WIDTHS ARE IN ADDITION TO R-O-W.
3. TRANSVERSE GRADE ARE 3%.
4. 8.0' PARKING OPTIONAL

CENTRAL POINT

CITY OF
CENTRAL POINT
PUBLIC WORKS DEPARTMENT

UNIFORM STANDARDS
FOR
PUBLIC WORKS CONSTRUCTION

INDUSTRIAL STREET

| REVISED | APPROVED | CHECKED |
|---|---|---|
| DATE | DATE | DATE |

DRAWING No. ST-40

FILE: CP-ST-40.DWG

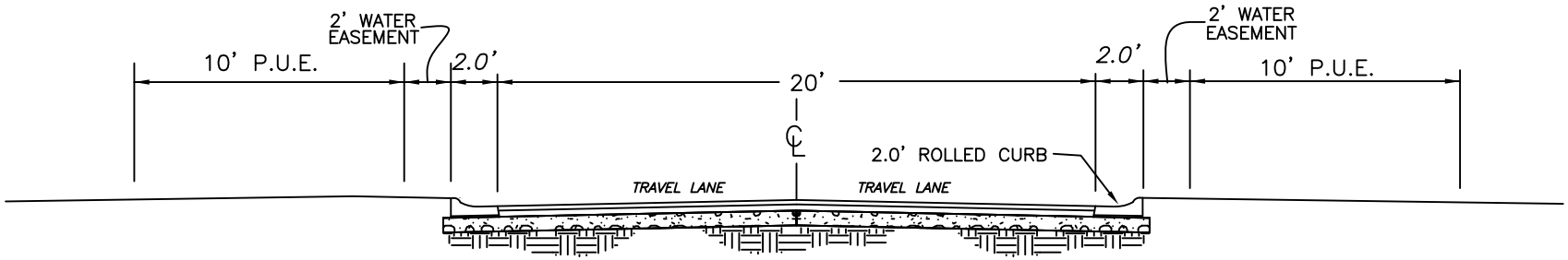


## PRIVATE DRIVE & ALLEY W/ ROLLED CURB

*NOT TO SCALE*

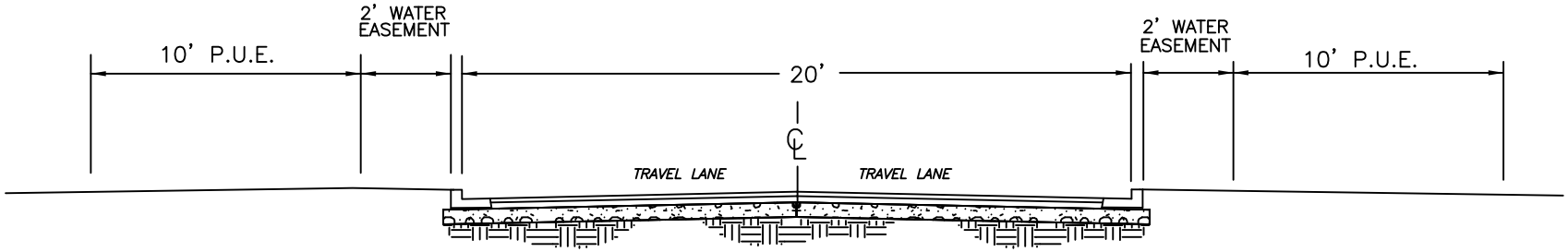


## PRIVATE DRIVE & ALLEY W/ STANDARD CURB & GUTTER

*NOT TO SCALE*

*NOTES*

1. SEE TABLE 300–3 FOR MINIMUM STREET SECTION REQUIREMENTS.
2. SEE TABLE 300–1E FOR WIDTHS AND RIGHT OF REQUIREMENTS.
3. TRANSVERSE GRADE ARE 3%.

CENTRAL POINT

*CITY OF*

*CENTRAL POINT*

*PUBLIC WORKS DEPARTMENT*

UNIFORM STANDARDS FOR PUBLIC WORKS CONSTRUCTION

# PRIVATE DRIVES

| | | |
|---|---|---|
| CHECKED | APPROVED | REVISED |
| DATE | DATE | DATE |

DRAWING No. ST-42

FILE: CP–ST–42.DWG

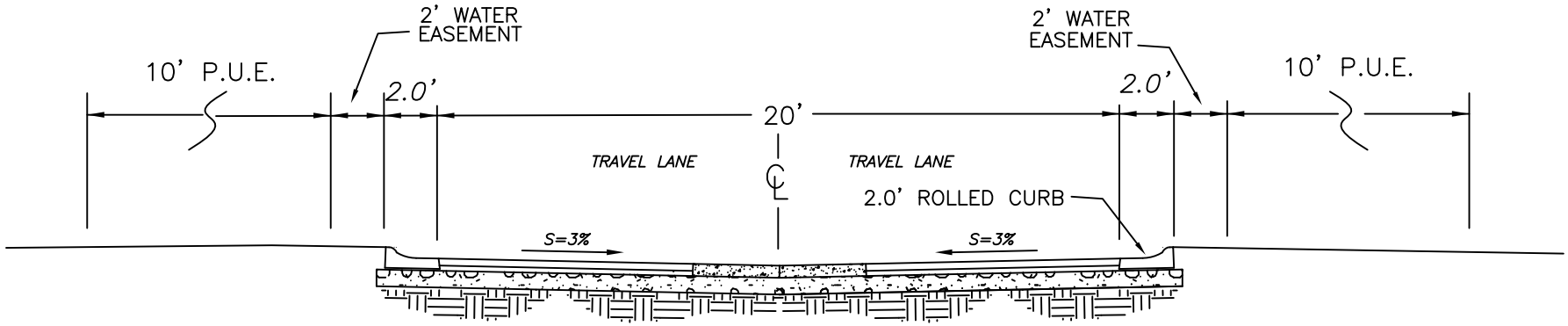


## PRIVATE DRIVE & ALLEY
## W/ ROLLED CURB & VALLEY GUTTER

*NOT TO SCALE*

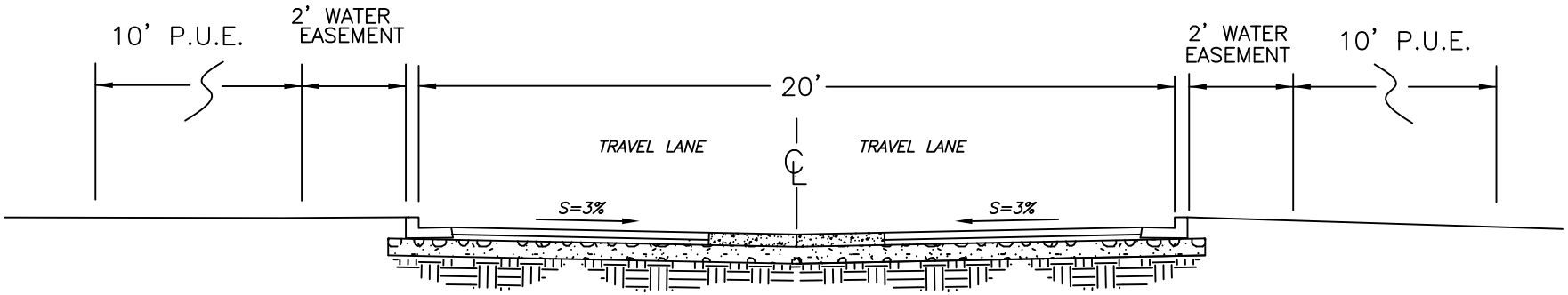


## PRIVATE DRIVE & ALLEY
## W/ STANDARD CURB & GUTTER & VALLEY GUTTER

*NOT TO SCALE*

*NOTES*

1. SEE TABLE 300-3 FOR MINIMUM STREET SECTION REQUIREMENTS.
2. SEE TABLE 300-1E FOR WIDTHS AND RIGHT OF REQUIREMENTS.
3. TRANSVERSE GRADE ARE 3%.
4. SEE A-7 FOR CONCRETE VALLEY GUTTER DETAIL

CENTRAL POINT

CITY OF
CENTRAL POINT
PUBLIC WORKS DEPARTMENT

UNIFORM STANDARDS
FOR
PUBLIC WORKS CONSTRUCTION

PRIVATE DRIVES

| | | |
|---|---|---|
| CHECKED | APPROVED | REVISED |
| DATE | DATE | DATE |

DRAWING No. ST-43

FILE: CP-ST-43.DWG

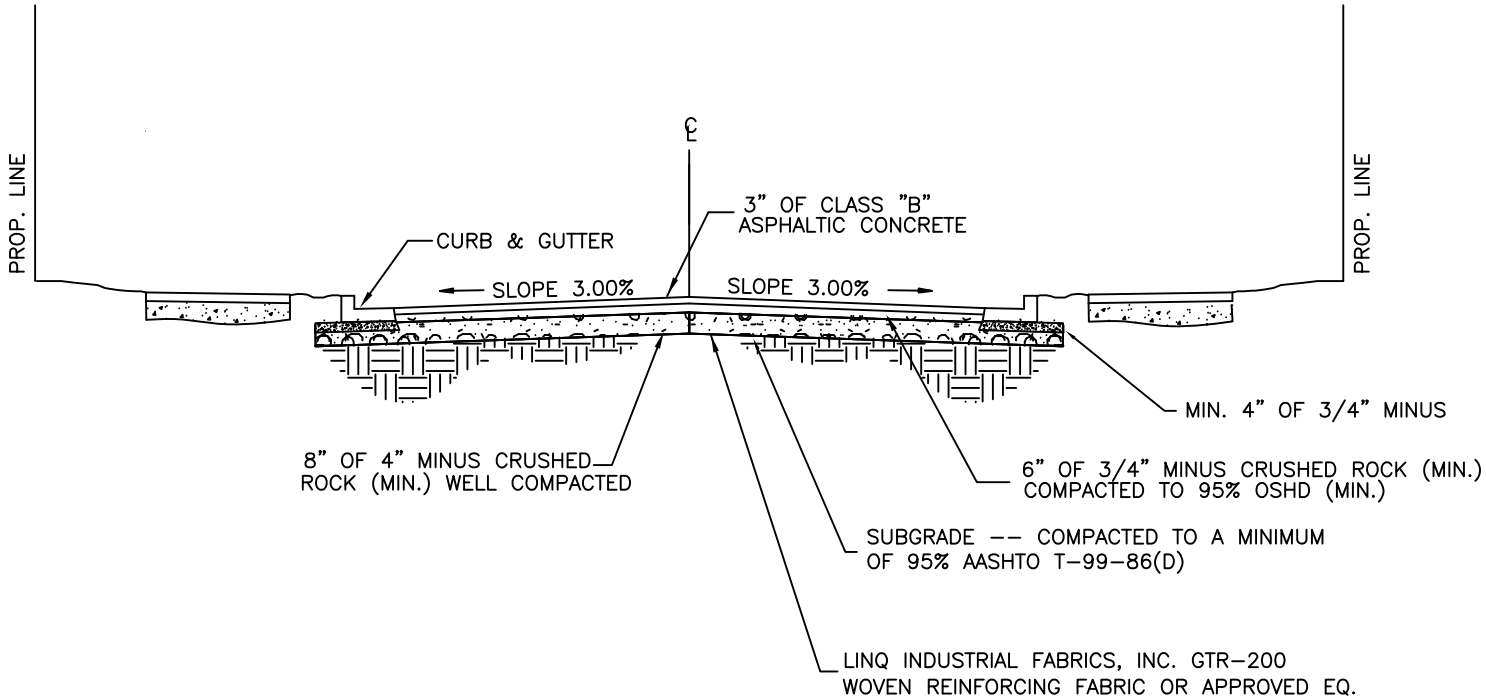


# LOCAL STREET MINIMUM THICKNESS

NOTES:

1. SECTIONS SHOWN ARE MINIMUMS. THE CITY SHALL EVALUATE THE SUBGRADE MATERIAL PROPERTIES AND EXPECTED TRAFFIC LOADS, AND WILL DESIGN THE STREET SECTION ACCORDINGLY.
2. SURFACE/STORMWATER DRAINAGE COLLECTION AND CONVEYANCE FACILITIES SHALL BE REQUIRED FOR ALL STREET IMPROVEMENTS
3. SEE TABLE 300 – 3

CITY OF CENTRAL POINT
PUBLIC WORKS DEPARTMENT

UNIFORM STANDARDS FOR PUBLIC WORKS CONSTRUCTION

LOCAL STREET THICKNESS

CHECKED DATE
APPROVED DATE
REVISED DATE

ST-50
DRAWING No.

FILE: CP-ST-50.DWG

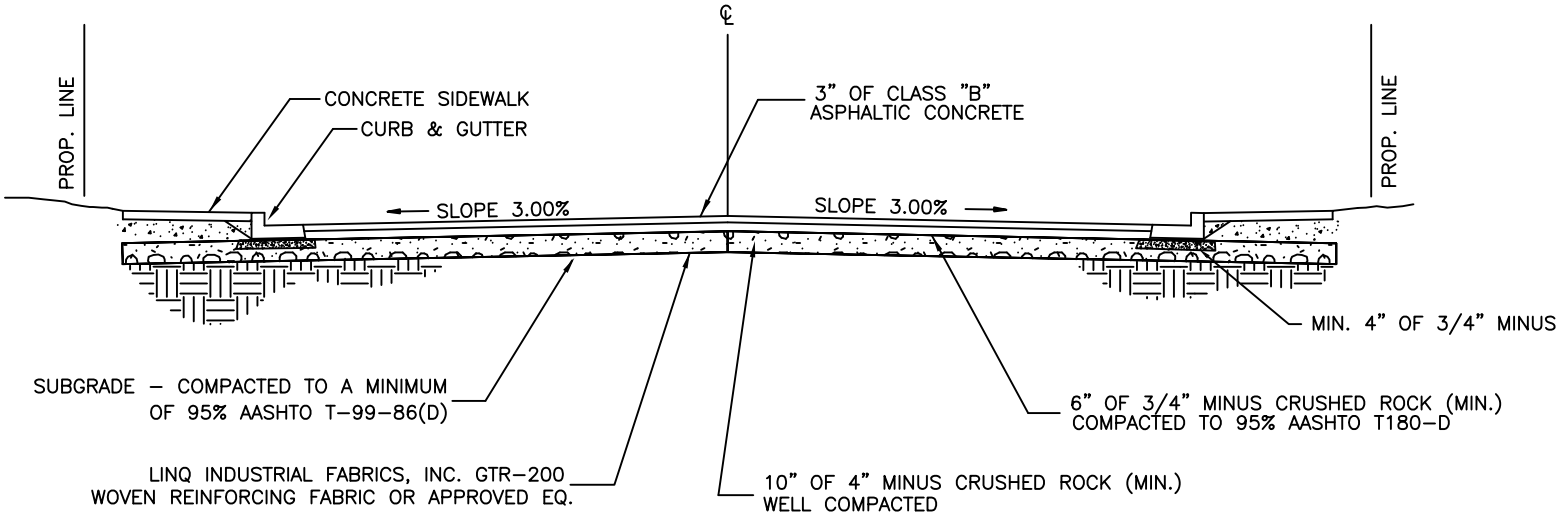


# COLLECTOR STREET MINIMUM THICKNESS

NOTES:

1. SECTIONS SHOWN ARE MINIMUMS. THE CITY SHALL EVALUATE THE SUBGRADE MATERIAL PROPERTIES AND EXPECTED TRAFFIC LOADS, AND WILL DESIGN THE STREET SECTION ACCORDINGLY.

CITY OF CENTRAL POINT
PUBLIC WORKS DEPARTMENT

UNIFORM STANDARDS FOR PUBLIC WORKS CONSTRUCTION

COLLECTOR STREET THICKNESS

CHECKED | DATE
APPROVED | DATE
REVISED | DATE

DRAWING No. ST-51

FILE: CP-ST-51.DWG

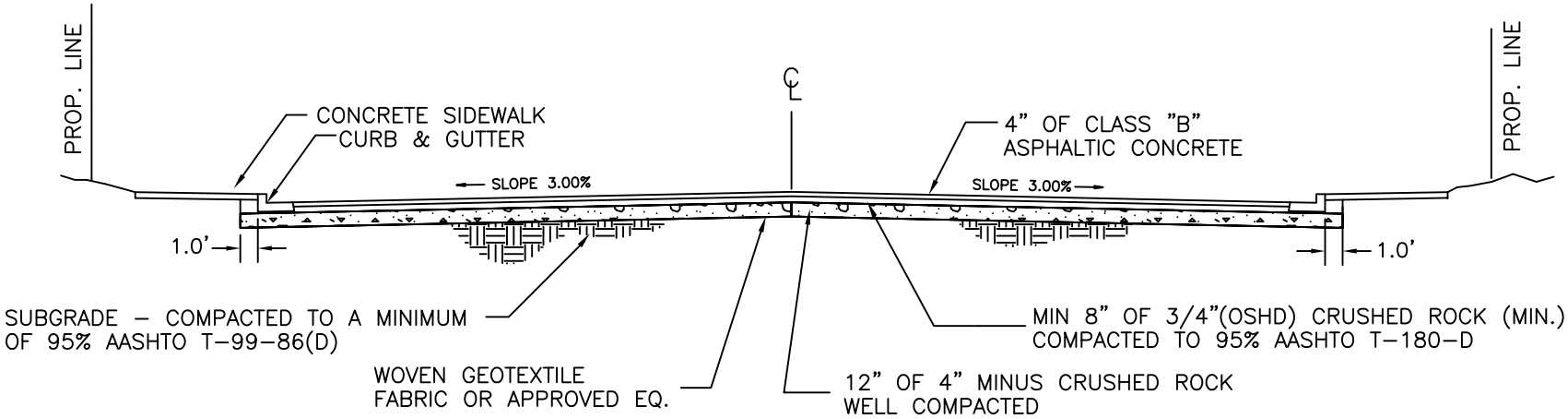


# ARTERIAL STREET MINIMUM THICKNESS

CITY OF
CENTRAL POINT
PUBLIC WORKS DEPARTMENT

UNIFORM STANDARDS
FOR
PUBLIC WORKS CONSTRUCTION

ARTERIAL STREET THICKNESS

| | | |
|---|---|---|
| CHECKED | APPROVED | REVISED |
| DATE | DATE | DATE |

DRAWING No. ST-52

FILE: CP–ST–52.DWG

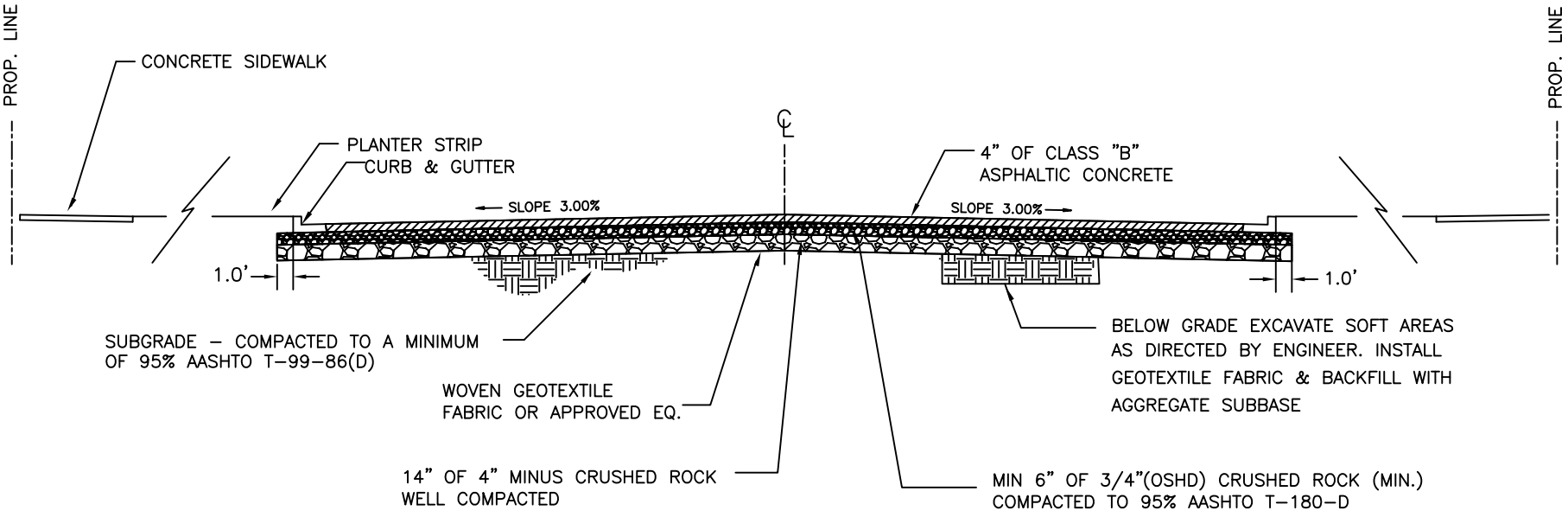


# INDUSTRIAL STREET MINIMUM THICKNESS

CITY OF
CENTRAL POINT
PUBLIC WORKS DEPARTMENT

UNIFORM STANDARDS
FOR
PUBLIC WORKS CONSTRUCTION

INDUSTRIAL STREET MINIMUM THICKNESS

CHECKED | DATE
APPROVED | DATE
REVISED | DATE

DRAWING No. ST-53

FILE: CP-ST-53.DWG