Gary West Living Trust Single Family Residence

STRUCTURAL NOTES

GENERAL:

1. These structural notes supplement the drawings. any discrepancy found among the drawings, these notes, and any site conditions shall be reported in a timely manner to the engineer, who shall respond to any discrepancy in writing. Any work done by the contractor after discovery of such discrepancy shall be done at the contractor's own risk.
2. The contractor shall verify and coordinate the dimensions among all drawings prior to proceeding with any work or fabrication.
3. The contractor is responsible for all demolition and construction methods, techniques, sequencing, and safety required for the work.
4. The contractor is responsible for the design and construction of all erection bracing, form work, and temporary shoring required for the work.
5. Where no specific detail is shown, the construction shall be identical or similar to that indicated for like cases of construction on this project. Should there be any question, contact the structural engineer prior to proceeding.
6. Any substitutions for structural members, hardware or details shall be reviewed by the structural engineer. Such review will be billed on a time and materials basis to the general contractor with no guarantee that the substitution will be allowed.
7. Do not scale drawings. contact the structural engineer for any dimensions not shown.

DESIGN CODE:

1. 2014 Oregon Residential Specality Code
2. All reference to other codes and standards (ACI, ASTM, etc.) shall be for the latest or most current edition available.

Design Live Loads:
Ground Snow Load: 25 psf
Floors: 40 psf residential,
Wind: 120 mph (exposure B) (100 yr, 3 sec gust)
Seismic: D1

FOUNDATIONS:

1. Maximum design soil bearing pressure = 1500 psf per (assumed)
2. Footing elevations shown on drawings are to bottom of footing.
3. Footings shall be founded on firm, undisturbed soil.
4. All footings shall be a minimum of 1'-0" below final grade per soils report.
5. Bottom of footings shall be stepped from elevation to elevation at 2'-0" horizontal to 1'-0" vertical steps or shall be sloped not to exceed 1 vertical to 10 horizontal when approved by the engineer.

CONCRETE (CAST IN PLACE):

1. All concrete shall be normal weight and shall develop a minimum 28 day laboratory cured compressive-cylinder strength of:
   2500 psi for all concrete
2. Concrete, forms, mixing, placing and curing shall conform to aci manual of concrete practice, latest edition, and specifications.
3. Concrete shall have a maximum slump of 4 inches.
4. Concrete shall be placed in one continuous operation.
5. Size and location of sleeves through floors or walls for mechanical or electrical access shall be approved by the engineer prior to placing concrete.
6. All bolts in concrete shall conform to astm specification A307 and shall be of the size indicated on the drawings.

REINFORCING STEEL:

1. Reinforcing bars shall be new billet steel and shall conform to:
   ASTM A615 grade 60 for all reinforcement.
   ASTM A615 grade 40 for beams, stirrups, column ties and as noted.
2. All welded reinforcing steel, metal inserts and connections shall conform to IBC standards.
3. Welded wire fabric shall conform to ASTM A185.
4. Reinforcement shall be detailed, fabricated and placed in accordance with ACI Code 318 and ACI Manual 315, unless otherwise noted. all reinforcement shall be free of loose mill and rust scale, oil, dirt and coatings of any manner that will reduce bond. all reinforcement shall be continuous with adequate laps.
5. Reinforcement shall be secured in forms with suitable ties and anchorage to prevent displacement. Bars adjacent to earth shall be supported by cement mortar cubes.
6. The following minimum concrete cover shall be provided for reinforcement:
   a) concrete cast against earth. . . . . 3"
   b) concrete exposed to earth or weather
      #6 and larger. . . . . 2"
      #5 and smaller. . . . . 1-1/2"
   c) concrete not exposed to earth or weather
      slabs, walls and joists, #11 and smaller. . . . . 3/4"
      beams and columns. . . . . 1-1/2"
7. Place 2'-0" x 2'-0" bars at corners and intersections for walls and foundations equal in size and spacing to horizontal reinforcing.
8. Reinforcement splices, shall be 44 dia. (24" min.) laps.
9. Unless noted otherwise, provide shrinkage & temperature reinforcement in all slabs.

BOISE CASCADE PRODUCTS:

1. Roof and floor framing designated "BCI", "V-Lam", shall be the type and size indicated on drawings, as manufactured by Boise Cascade,Inc.
2. Laminate multiple joists where indicated on drawings as per joist manufacturer's recommendations.
3. Contractor to verify all weights and locations of concentrated loads due to roof top mechanical units, mechanical piping, electrical units, folding partitions and other concentrated loads prior to joist fabrication.
4. Camber all joists as per manufacturer's recommendations.
10. If joists are supplied other than those specified, the joists supplied shall meet or exceed the shear capacity, moment capacity, and stiffness properties of the joist specified. all substitutions must be approve by the engineer.

STRUCTURAL SHEATHING

1. All sheathing shall be as follows:
   a) roof sheathing: 5/8" OSB, Index 32/16
   b) floor: 7/8" T&G, Index 48/24
   c) walls: 7/16" OSB, Index 32/16
2. Floor and roof plywood shall be installed with face grain perpendicular to supports and and joints shall be staggered.
3. Provide 1 ply clip per span @ unsupported edge of roof sheathing where support spacing exceeds 16" o.c. u.n.o. as blocked edges.
4. Block all wall sheathing with 2 x 4 blocking at all edges.
5. All floor sheathing shall be glued to supporting joist w/ subfloor adhesive.

SAWN FRAMING LUMBER:

1. All sawn lumber shall be Douglas Fir, S4S, graded per WCLIB rules #16, of the following grades:
   studs, joists, plates, headers, blocking: No. 2
   4x beams: No. 2 ONO.
   6x beams, posts: No. 1
2. All 2x lumber shall be S-dry, u.n.o.
3. Double all joists under all parallel partitions.
4. All wood in permanent contact with concrete or masonry to be pressure treated. treat all cut ends.

NAILING AND FASTENERS:

1. Nailing indicated on plans and details are "common" nails. Minimum framing nailing shall conform to IBC table 23-11-b-1. See details for additional typical nailing requirements. Substitution of nails other than "common" is not permitted without prior approval.
2. Power driven nails other than "common" nails may be used if data is submitted and approved prior to use.
3. Plywood nailing shall be as follows:
   a) roof sheathing:. . . . . 8d at 6" o.c. at all panel edges
      8d at 12" o.c. at all intermediate supports
   b) floor sheathing:. . . . . 10d at 6" o.c. at all panel edges
      10d at 10" o.c. at all intermediate supports
   c) wall sheathing:. . . . . block all edges with 2 x 4 flats,
      nailing as indicated on drawings.
4. All bolted connections shall be made with machine bolts (m.b.) conforming to ASTM A307. all bolts and lags shall be installed with standard wrought washers, unless noted otherwise.
5. Joist hangers, hold downs, and other framing accessories are referred to on plans by particular type as manufactured by Simpson Company - San Leandro, ca. All hardware is to be fastened per manufacturer's specifications, u.n.o.
6. Epoxy anchor bolts indicated on drawings shall be as manufactured by Hilti Co. or approved equal. Depth of embedment shall be as called for on the drawings. Install as recommended by the manufacturer with C-20 grout.
7. Sills at walls shall be bolted to concrete with 1/2" diameter x 10" long anchor bolts or 1/2" diameter epoxy anchor bolts at 4'-0" o.c. maximum and within 1'-0" of sill plate ends, corners or splices, unless detailed otherwise. Provide 3"x3"x¼" plate washers at a.b.'s.

NAILING SCHEDULE

Connection	Nailing
joist to sill or girder, toe nail	3-8d
bridging to joist, toenail each end	2-8d
sole plate to joist or blocking, typical face nail	16d @ 12" o.c.
sole plate to joist or blocking, at braced panels	4-16d per 12"
top plate to stud, end nail	2-16d
stud to sole plate	4-8d toenail, 2-16d end nail
double studs, face nail	16d @ 24" o.c.
double top plates, typical face nail	16d @ 16" o.c.
double top plates, lap splices	12-16d equally spaced
blocking between joists or rafters to top plate, toenail	3-8d
rim joist to top plate, toe nail	16d @ 6" o.c.
top plates laps and intersections, face nail	2-16d
continuous header, two pieces	16d @ 16" o.c.
ceiling joist to top plate, toe nail	3-8d
continuous header to studs,toenail	4-8d
header to king stud, end nail	3-16d
ceiling joists, laps over partitions, face nail	3-16d
ceiling joists to parallel rafters, face nail	3-16d
rafter to plate, toenail	3-8d
built up corner studs	16d @ 24" o.c.
multiple stud post	16d @ 8" o.c.
wood structural wall panels	8d common @ 6" o.c. panel edges 8d common @ 12" o.c. field
roof structural sheathing	8d common @ 6" o.c. panel edges 8d common @ 12" o.c. field
floor structural sheathing	10d common @ 6" o.c. panel edges 10d common @ 12" o.c. field

1. Common or box nails can be used except where otherwise stated.
2. Minimum nailing requirements, other nailing requirements may be specified in the construction documents.

METAL PLATE CONNECTED TRUSSES:

1. Metal plate connected trusses shall be designed and manufactured in accordance with "Design Specifications for Light Metal Plate Connected Wood Trusses", TPI-24 as published by the Truss Plate Institute and shall be designed for the following minimum loads:
   top chord. . . . . 25 psf snow load
   " 8 psf dead load
   bottom chord. . . . . 10 psf live load (not concurrent with top chord live load)
   " 7 psf dead load
   net uplift (wind). . . . 15 psf (min)
2. The truss manufacturer shall submit designs, stress diagrams, shop drawings and calculations bearing the stamp of a (structural) Engineer registered in the State Of Oregon to the Engineer-Of-Record for review.
3. The truss manufacturer shall supply all hardware, anchorage, and metal seats required, and shall design and indicate bracing required to be supplied by the General Contractor.
4. Lower chords shall be cambered to provide for dead load deflection at gypsum board ceiling.
5. All connection plates shall develop the full stress in member with a minimum transfer at any member of 2000 lbs. and minimum size of plates of 3" x 5".
6. Truss supplier shall review all of the truss, bridging, hanger, blocking and web stiffener requirements and all concentrated loads prior to truss fabrication.
7. Contractor to coordinate with truss manufacturer all mechanical loads and locations.

VICINITY MAP

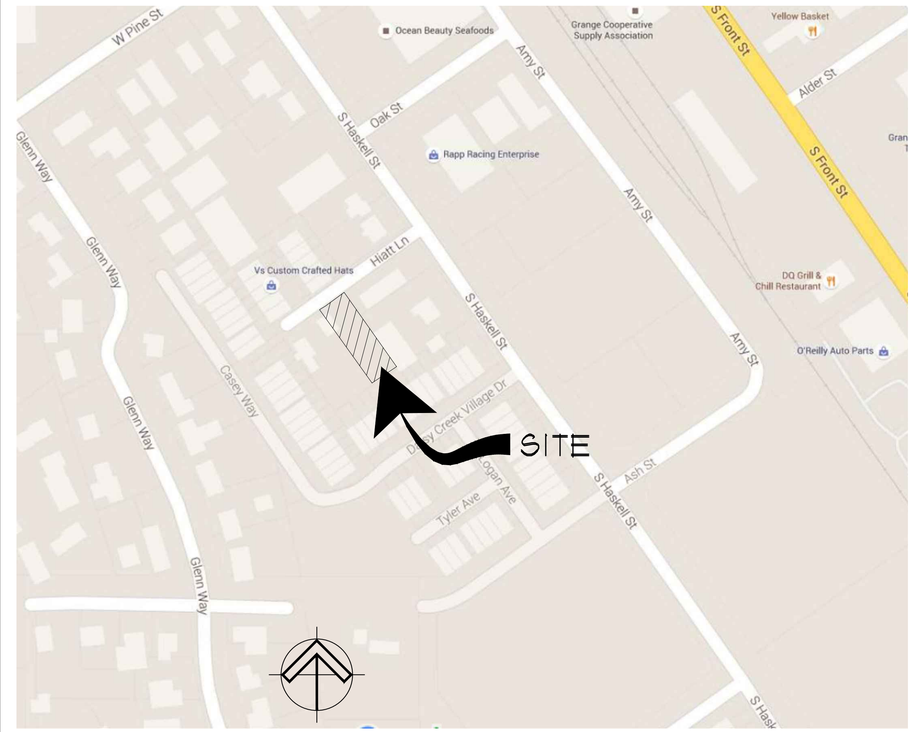

GENERAL NOTES

1. These general project notes and general construction specifications and notes supplement the drawings. Any discrepancies found among them, the drawings, and any site conditions shall be reported in a timely manner to the engineer, who shall of such discrepancy shall be done at the contractor's own risk.
2. Do not scale drawings, contact the building designer for any dimensions not shown.
3. The general contractor shall verify and coordinate the dimensions among all drawings prior to proceeding with any work or fabrication. The general contractor shall be responsible for all conditions at the site and notify the
4. Unless otherwise noted, all dimensions are to face of stud, rough concrete surface,
5. The general contractor is responsible for all demolition and construction methods, techniques, sequencing, and safety required for the work.
6. The general contractor is responsible for the design and general construction of all erection bracing, form work, and temporary shoring required for the work.
7. It is the responsibility of every contractor to insure work, details, and assemblies required for a complete installation, whether specifically detailed in these drawings or not, are completed.
8. Install all equipment and materials in strict conformance with manufacture's specifications applicable association standards, or normally acceptable trade standards.
9. Any substitutions for structural members, hardware, or details shall be reviewed by the engineer prior to installation.
10. The general contractor shall verify and be responsible for all mechanical, electrical, and plumbing (mep) conditions at the site and shall develop mechanical, electrical, and plumbing (mep) drawings and specifications to obtain all required permits and coordinate installation with real property owner.
11. Safety note:
    a. It is the contractors responsibility to comply with the pertinent sections, as they apply to this project, of the "Construction Safety Orders" issued by the State of Oregon latest edition, and all osha requirements.
    b. The owner and the structural engineer do not accept any responsibility for the contractor's failure to comply with these requirements.

ABBREVIATIONS

a.b. -------	anchor bolt	(n) -------	new
btwn ------	between	n.s. -------	near side
blk. ------	block	n.t.s. ------	not to scale
c.j. ------	construction joint	oc -------	on center
clr -------	clear	oh -------	opposite hand or overhang
contin -----	continuous	pc -------	piece
c.p. -------	complete penetration	p.p. ------	partial penetration
csk -------	countersink	p.t. ------	pressure treated
d.f. -------	douglas fir	rhsw ------	round head wood screw
dl -------	dead load	sc -------	shear connector (3/4" ϕ)
do -------	ditto	sp -------	structural plywood
(e) -------	existing	stfnr ------	stiffener
e.j. -------	expansion joint	stggrd -----	staggered
en. -------	edge nailing	t & b -----	top & bottom
e.w.e.f. ----	each way each face	t. & g -----	tongue & groove
fb -------	face of block	t.n. ------	toe nail
fc -------	face of concrete or framing clip(simpson a35)	ts -------	top of slab
fhws ------	flat head wood screw	t.o.s. -----	top of steel
fp -------	face of plywood	u.n.o. -----	unless noted otherwise
fs -------	face of stud	w/ -------	with
f.s. -------	far side	w/o -------	without
ga -------	gauge	w.p. ------	work point
hsb ------	high strength bolt(A-325)	wwf ------	welded wire fabric
ht. -------	height	℄ --------	centerline
j.h. -------	joist hanger (Simpson)	p --------	plate
ll --------	live load	# --------	number or pounds
l.s. -------	lag screw	□ --------	square
lt. wt. -----	light weight	○ --------	round
m.i. -------	malleable iron	▨ -------	continuous wood in section
		▨ -------	wood blocking in section

ENERGY CODE REQUIREMENTS

PRESCIPTIVE ENERGY PATH 1 HIGH EFFICIENCY HVAC

underfloor	R-30
window & sliding glass doors	U-0.32
exterior doors ≤ 28ft^2	U-0.54
exterior doors > 28ft^2	U-0.20
doors w/>25ft^2 glazing	U-0.40^B
above grade wall insulation	R-21
flat ceilings	R-38
vaulted ceilings≤50% hcd fir area	R-30
vaulted ceilings~50% hcd fir area	R-38

B=Hinged doors only - glazing that is double pane with low-e coating on one surface shall be deemed to comply with this u-0.40 requirement.

90% AFUE furnace, 8.5 hspf heat pump, 3.0 COP ground source heat pump	
forced air duct insulation	R-8
Building Tightness Testing Mechanical exhaust, supply or combination system providing rates per Table 1104(3) or ASHRAE 622	
Blower door tested	
50% fixtures - high efficiency	

SHEET INDEX

1 Title Sheet
2 Floor Plans, Elevations, Sections
S1 Lateral Plans
S2 Standard Details
S3 Foundation Plan, Main Floor Framing Plan, roof Framing Plan Sections

REGISTERED PROFESSIONAL ENGINEER
58521PE
OREGON
JAN. 14, 2003
SHANE W. EARY

EXPIRES: 12-31-2017

This document, and the ideas and designs incorporated herein, as an instrument of professional service, is the property of Structural Integrity, LLC, and is not to be used, in whole or part, for any other project without the written authorization of Structural Integrity, LLC.

STRUCTURAL INTEGRITY, LLC
724 MAIN STREET, SUITE 214
KLAMATH FALLS, OR 97601
541.884.1081

DRAWN DATE 6/29/16

Gary West Living Trust
Single Family Residence
249 Hiatt Lane
Central Point, OR

TITLE
SHEET

JOB NUMBER	SHEET NO.
16090A	1 1 OF 5

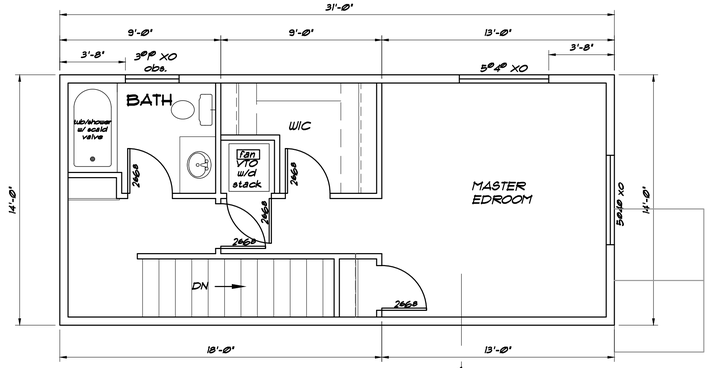

2nd Floor Plan

1/4" = 1'-0"

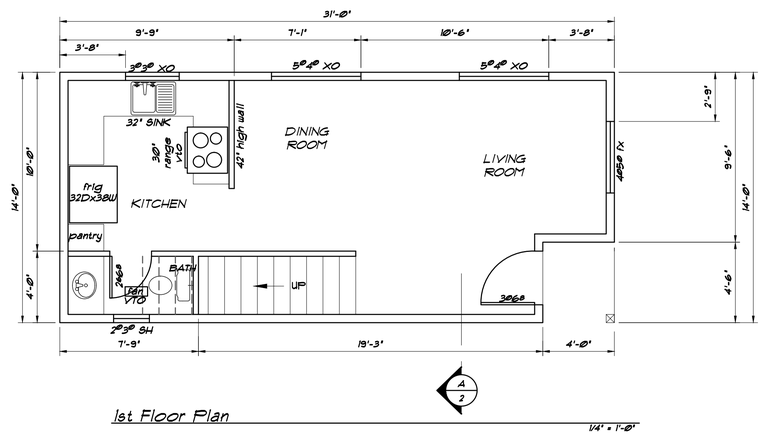

1st Floor Plan

1/4" = 1'-0"

Rear Elevation

1/8"=1'-0"

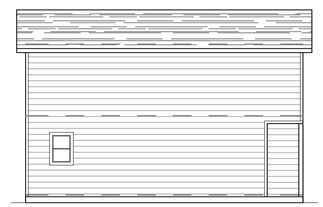

Left Elevation

1/8"=1'-0"

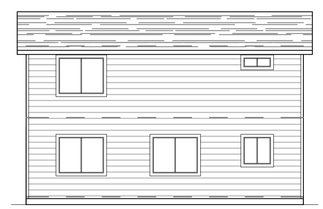

Right Elevation

1/8"=1'-0"

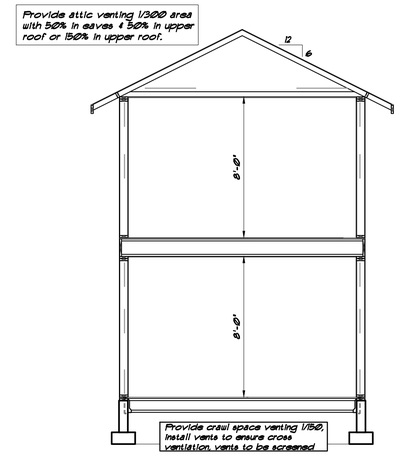

Building Section

1/4"=1'-0"

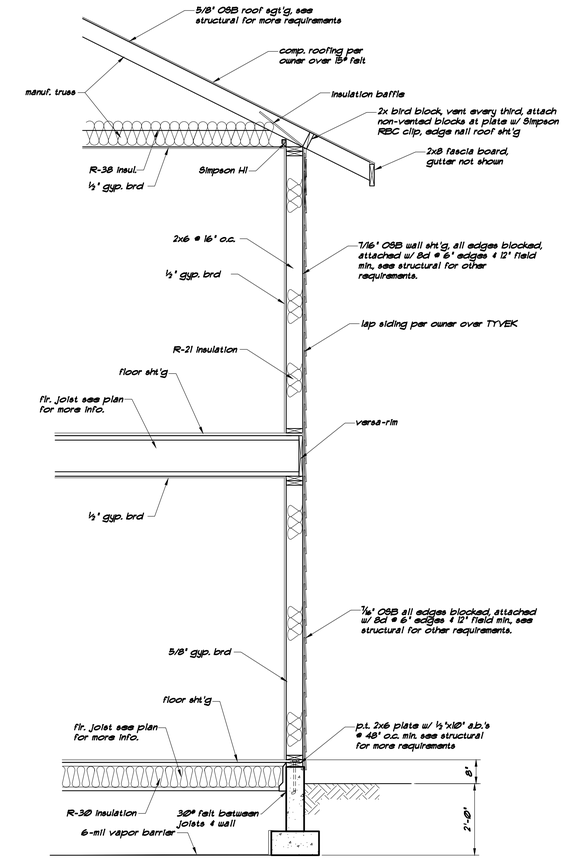

Typical Wall Section

1/2"=1'-0"

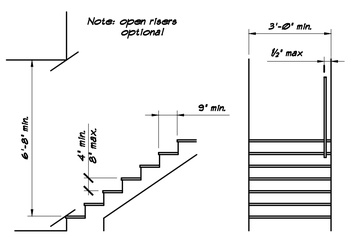

DETAIL STAIRS

STAIR & GUARD RAILING SPECIFICATIONS

General: when risers are closed treads may have a uniform projection not to exceed 1-1/2" to 12".

The greatest riser height w/in any flight shall not exceed the smallest by more than 3/8" stairways shall not be less than 3' in unobstructed, and the headroom rise & run shall conform to stair detail shown. Handrails may project from each side of stairway a distance of 3-1/2" into the required width.

The radius of curvature at the leading edge of tread to be 9/16" min. a nosing not less than 3/4" (19 mm) but not more than 1 1/4" (32 mm) shall be provided on stairways w/ solid risers. solid risers shall be vertical or sloped horizontally from the leading edge of the tread above at an angle of not more than 30⁰ from the horizontal.
Exceptions nosing is not required where the tread depth is a min of 10" (254 mm)

Handrails handrails having a min height of 30" & a max height of 38", respectively measured vertically from the nosing of the treads shall be provided on at least one side of stairways having one or more risers. Spiral stairways shall have the required handrail located on the inside radius. all required handrails shall be continuous the length of the stairs. Ends shall be returned or shall terminate in newel posts or safety terminal's stellar space. The hand grip portion of the handrails shall not be more than 2-5/8" wide & no less than 1-1/4" in cross-sectional dimension, or the shape shall provide an equivalent gripping surface. The hand grip portion of handrails shall have a smooth surface with no sharp corners or razor edges.

Handrails projecting from the wall shall have a space of not less than 1-1/2" between the wall and the handrail.

Guardrails porches, balconies or raised floor surfaces located more than 30" above the floor or grade below shall have guardrails not less than 36" in height.

Open sides of stairways with a total rise of more than 30" above the floor or grade below shall have guardrails not less than 34" in height measured vertically from the nosing of the treads.

Required guardrails on open sides of stairways, raised floor areas, balconies & porches shall have intermediate rails or ornamental closures which will not allow passage of an object 4" or more in diameter and triangular openings max 6", horizontal spacing between the vertical members in required guardrails shall be a max of 4" on guardrails & 5" on the open sides of stairways at the farthest point between the members.
Exceptionthe triangular openings formed by the riser, tread & bottom rail of a guardrail at the open side of a stairway may be of such a size that a sphere 6" in diameter cannot pass through.

Illumination: automatic continuous or activation is not required for exterior stairs. controls for interior stairs shall be located at the top & bottom of the stairway.

RESIDENTIAL STAIR DETAIL

SCALE: nts

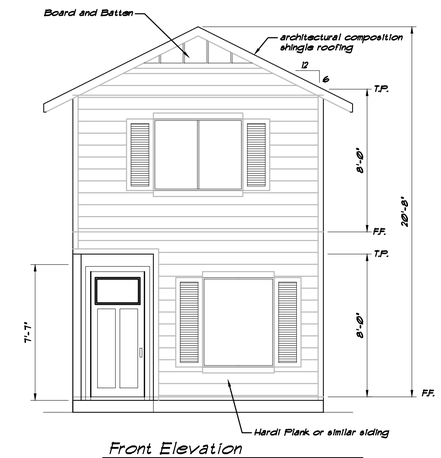

Front Elevation

1/4"=1'-0"

REGISTERED PROFESSIONAL ENGINEER
58521PE
OREGON
JAN. 14, 2009
SHANE W. HAGE

EXPIRES: 12-31-2017

This document, and the ideas and designs incorporated herein, as an instrument of professional service, is the property of Structural Integrity, LLC and is not to be used, in whole or part, for any other project without the written authorization of Structural Integrity, LLC.

STRUCTURAL INTEGRITY, LLC
724 MAIN STREET, SUITE 214
KLAMATH FALLS, OR 97601
541.884.1081

DRAWN DATE 6/29/16

Gary West Living Trust
Single Family Residence
249 Hyatt Lane
Central Point, OR

Floor Plans

JOB NUMBER	SHEET NO.
16090A	2 2 OF 5

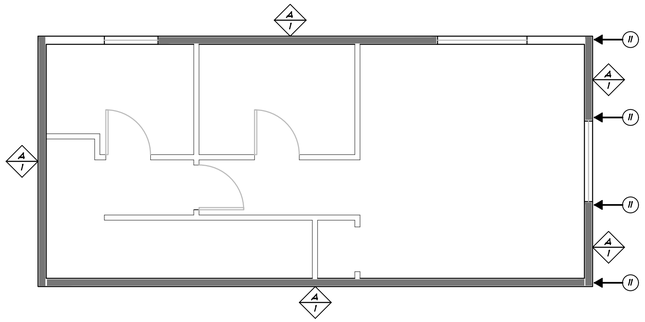

Second Floor Lateral Plan

SCALE: 1/4"=1'-0"

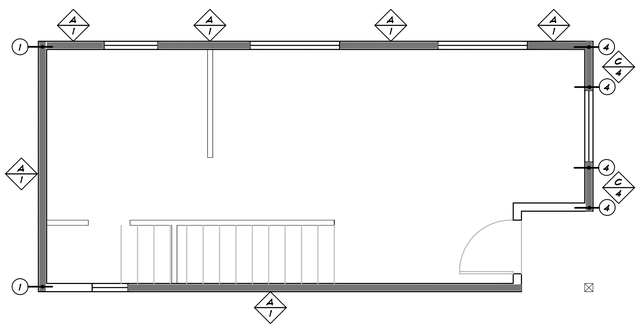

First Floor Lateral Plan

SCALE: 1/4"=1'-0"

SHEAR WALL

1. Shearwalls shall use a minimum of 7/16" OSB sheathing.
2. All panel edges shall be backed with 2" nominal or wider framing. panels may be installed either horizontally or vertically.
3. Field nailing shall be 8d common or galvanized box nails at 6" o.c. for studs spaced 24" on center and 12" o.c. for all other conditions.
4. When 8d nail spacing is 2" o.c. or 10d nail spacing is 3" o.c. or less or wall is double sided w/ nail spacing closer than 6" o.c. framing at adjoining panel edges shall be 4" nominal or wider and nails shall be staggered.
5. Shearwalls may use 3/8" thick sheathing provided studs are spaced a maximum of 16" on center or panels are applied with long dimension across studs. this includes T-1-11 and smartpanel type products. (one or two sided shearwalls)

WALL INFORMATION			DOUBLE SIDED WALL INFORMATION		
	COMMON NAIL	8d BOX		COMMON NAIL	8d BOX
A	8d nails @ 6" o.c. all edges	4" O.C.	E	8d nails @ 6" o.c. all edges	4" O.C.
B	8d nails @ 4" o.c. all edges	3" O.C.	F	8d nails @ 4" o.c. all edges	3" O.C.
C	8d nails @ 3" o.c. all edges	N.A.	G	8d nails @ 3" o.c. all edges	N.A.
D	10d nails @ 3" o.c. all edges	N.A.	H	10d nails @ 3" o.c. all edges	N.A.

Shearwall nailing must be driven so that their head or crown is flush with surface of sheathing. Overdriven nails will not be allowed or counted as surface of sheathing. Overdriven nails will not be allowed as appropriate nailing!!

SILL PLATE CONNECTION

	FOUNDATION CONNECTION		RIM JOIST CONNECTION
1	2x plate, ½"ø x 12" a.b.'s w/ 3/16"x3"x3" washer @ 48" o.c.	1	Simpson LTP4 @ 30" o.c.
2	2x plate, ½"ø x 12" a.b.'s w/ 3/16"x3"x3" washer @ 32" o.c.	2	Simpson LTP4 @ 20" o.c.
3	2x plate, ½"ø x 12" a.b.'s w/ 3/16"x3"x3" washer @ 24" o.c.	3	Simpson LTP4 @ 16" o.c.
4	2x plate, ½"ø x 12" a.b.'s w/ 3/16"x3"x3" washer @ 16" o.c.	4	Simpson LTP4 @ 14" o.c.
5	2x plate, ½"ø x 12" a.b.'s w/ 3/16"x3"x3" washer @ 12" o.c.	5	Simpson LTP4 @ 12" o.c.
6	3x plate, ½"ø x 12" a.b.'s w/ 3/16"x3"x3" washer @ 48" o.c.	6	Simpson LTP4 @ 10" o.c.
7	3x plate, ½"ø x 12" a.b.'s w/ 3/16"x3"x3" washer @ 32" o.c.	7	Simpson LTP4 @ 9" o.c.
8	3x plate, ½"ø x 12" a.b.'s w/ 3/16"x3"x3" washer @ 24" o.c.	8	Simpson LTP4 @ 8" o.c.
9	3x plate, ½"ø x 12" a.b.'s w/ 3/16"x3"x3" washer @ 16" o.c.	For rim joist condition 9 and 10 see details	
10	3x plate, ½"ø x 12" a.b.'s w/ 3/16"x3"x3" washer @ 12" o.c.	If wall sheathing is jointed at center of rim joist rim joist connection is not required	

HOLDOWN SCHEDULE

	HOLDOWNS	ANCHOR BOLT	POST		STRAPS	FASTENERS (total)	END LENGTH	POST
1	Simpson HDU2	setb16	(2) 2x	7	Simpson MST37	(20) 16d	9 1/2" min.	(2) 2x
2	Simpson HDU4	setb24	(2) 2x	8	Simpson MST48	(32) 16d	15" min.	(2) 2x
3	Simpson HDU5	setb24	(2) 2x	9	Simpson MST60	(46) 16d	21" min.	4x
4	Simpson HDQ8	setb28	(3) 2x	10	Simpson MST72	(56) 16d	27" min.	4x
5	Simpson HHDQ11	1" (24" embed.)	6x or (4) 2x	11	Simpson CS16	(28) 8d	14"	(2) 2x
6	Simpson HHDQ14	1" (28" embed.)	6x	12	Simpson CMST14	(74) 16d	34"	4x

notes:
1. dbl. studs shall be laminated together with 16d nail at 6" o.c. full height. (typical).
2. provide holdowns minimum 6" from each end of shear wall.
3. provide (2) additional #4 dowels with standard hook at each a.b. location.

Lateral Bracing Plan Notes

1. Refer to general structural notes on sheet S1.
2. Details on these plans are intended to depict the general construction methods for this structure. Connections, details, and conditions not specifically shown that are similiar to those that are specified shall be assumed on and the same. If questions regarding the application of details are encountered, notify the Engineer for clarification in a timely manner prior to construction.
3. All exterior wood framed walls to be sheathed with 7/16" OSB blocked w/ 8d common nails at 6" o.c. edge, & 12" o.c. field nailing minimum, see shearwall schedule and lateral plan for other requirements.
4. Shearwall and holdown designations. See schedule on this sheet.
5. Attach sole plate w/ (2) rows 16d @ 8" o.c.

REGISTERED PROFESSIONAL ENGINEER
58521PE
OREGON
JAN. 14, 2009
DUANE W. HARP

EXPIRES: 12-31-2017

This document, and the ideas and designs incorporated herein, as an instrument of professional service, is the property of Structural Integrity, LLC and is not to be used, in whole or part, for any other project without the written authorization of Structural Integrity, LLC.

STRUCTURAL INTEGRITY, LLC
724 MAIN STREET, SUITE 214
KLAMATH FALLS, OR 97601
541.884.1081

DRAWN DATE 6/29/16

Gary West Living Trust
Single Family Residence
249 Hyatt Lane
Central Point, OR

LATERAL PLANS & SHEARWALL SCHEDULE

JOB NUMBER	SHEET NO.
16090A	S1 3 OF 5

STANDARD STRUCTURAL DETAILS

applicable only to structural drawings by
Structural Integrity LLC

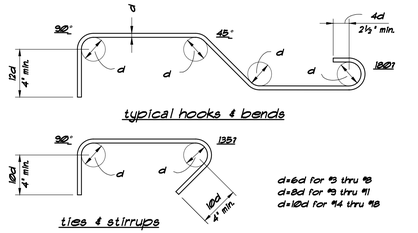

typical hooks & bends

ties & stirrups

d=6d for #3 thru #8
d=8d for #9 thru #11
d=10d for #14 thru #18

1/S2 rebar hooks & bends

n.t.s.

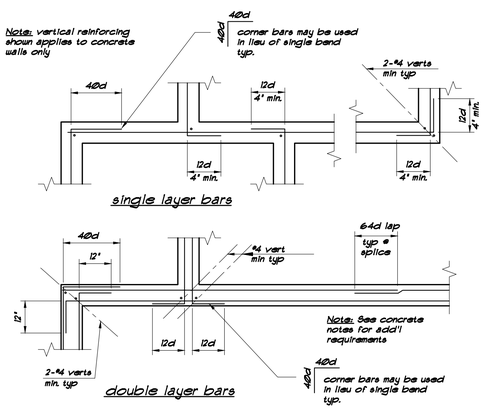

2/S2 corner reinforcing at concrete walls & footings

n.t.s.

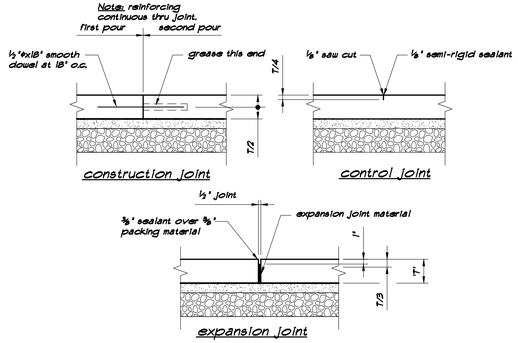

Note: Construction joints & control joints shall divide slab into areas not exceeding 1600 sq. ft. without reentrant corners & with length to width ratios not exceeding 1½ to 1. Contractor shall submit layout plan showing proposed control and construction joint locations. Joint spacing shall not exceed 18 feet in either direction. Semi-rigid sealant to be Metzger/ Meguire 999-80" or equal.

3/S2 slab-on-grade joints

n.t.s.

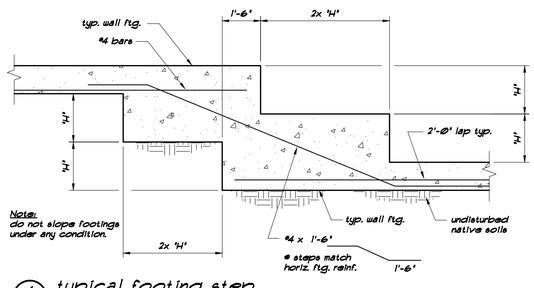

4/S2 typical footing step

n.t.s.

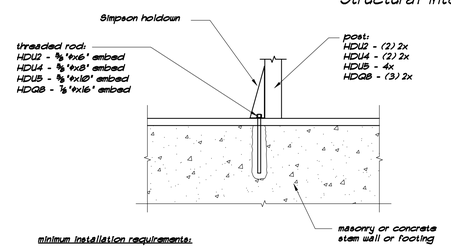

minimum installation requirements:

1. drill - drill hole to specified diameter and depth.
2. clean - remove dust from hole with oil-free compressed air. clean with nylon brush and blow out remaining dust. note: dust left in hole can reduce the adhesive's holding capacity.
3. fill - fill hole 1/2 - 2/3 full, starting from bottom of hole to prevent air pockets. withdraw nozzle as hole fills up.
4. insert - anchors must be clean and oil free. insert anchor, turning slowly until the anchor contacts the bottom of the hole. do not disturb during cure time.

5/S2 epoxy bolt holdown detail

n.t.s.

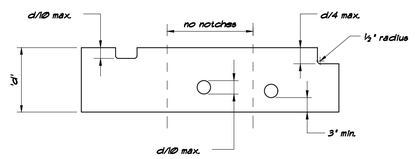

Notes:

1. predrill corners of notches so as not to over cut.
2. notches on the ends of joists & headers shall not exceed ¼ of the joist depth.
3. notches in the top of joists shall not exceed 1/6 the depth and shall not be located in the middle third of the span.
4. notches in the bottom of joists allowed only where specifically shown on drawings.
5. holes bored in joists shall not be within 3" of the top or bottom and shall not have a diameter larger than 1/4 the depth of the joist.

6/S2 notches for jst. & hdrs.

n.t.s.

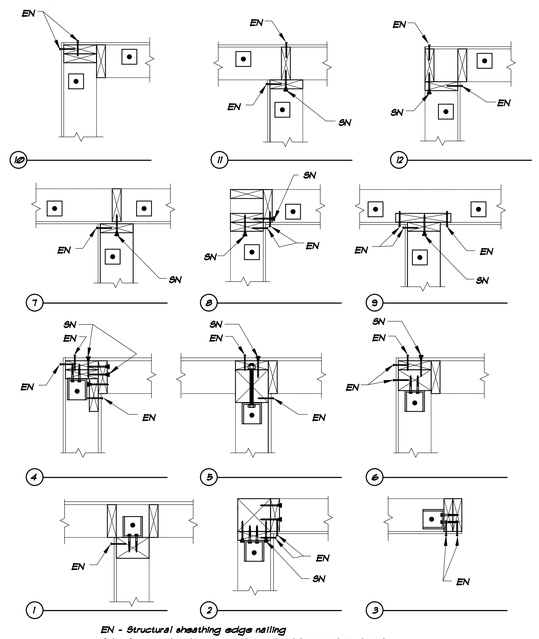

EN - Structural sheathing edge nailing
SN - Structural nailing per nailing schedule or other details
- Holdown per plan
- Anchor bolt w/ 3x3 plate washer per plan

7/S2 corner framing details

n.t.s.

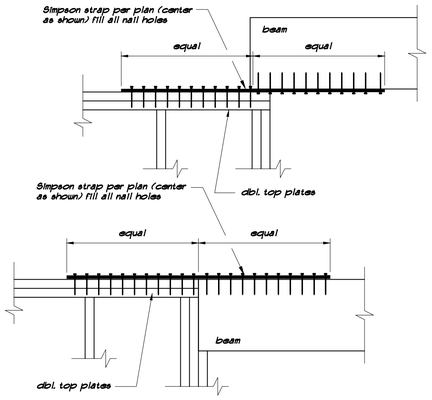

8/S2 drag strut details

n.t.s.

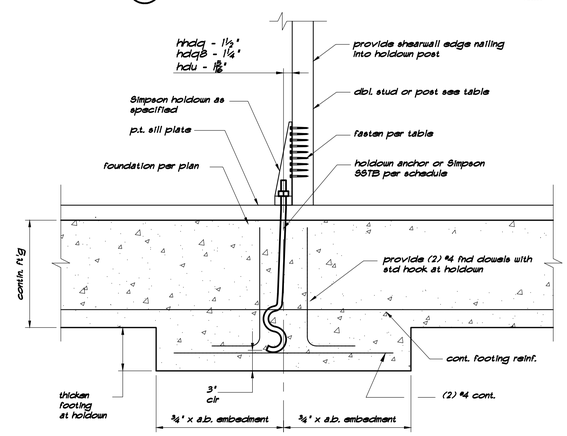

Notes:

1. holdowns noted on plan are to be located a minimum of 6" from the end of the shear wall.
2. laminate double studs together with 2 rows 10d nails at 4" o.c.

9/S2 typical Simpson holdown detail

n.t.s.

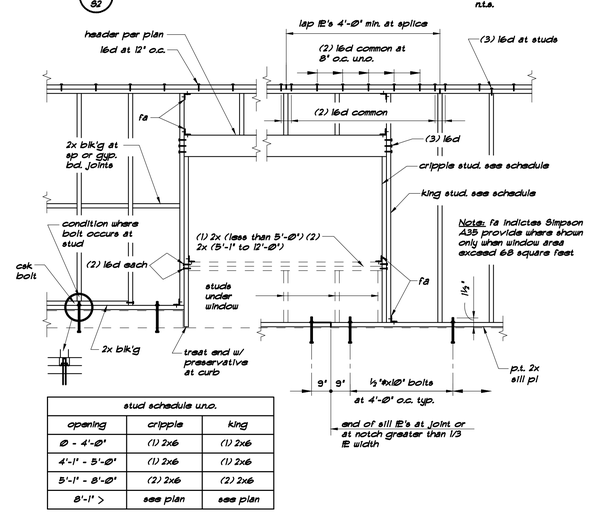

stud schedule u.n.o.		
opening	cripple	king
0 - 4'-0"	(1) 2x6	(1) 2x6
4'-1" - 5'-0"	(1) 2x6	(1) 2x6
5'-1" - 8'-0"	(2) 2x6	(2) 2x6
8'-1" >	see plan	see plan

10/S2 typical stud wall & opening detail

n.t.s.

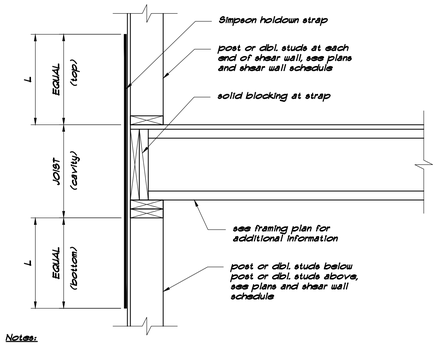

Notes:

1. holdowns noted on plan are to be located a minimum of 6" from the end of the shear wall.
2. laminate double studs together with 2 rows 10d nails at 4" o.c.
3. wrap and nail strap to beam/header below if applicable

11/S2 typical Simpson strap holdown detail

n.t.s.

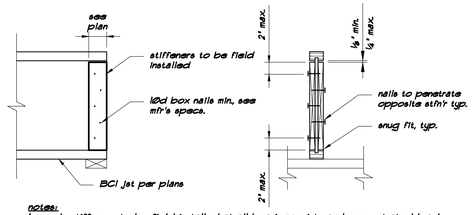

notes:

1. web stiffeners to be field installed at all bearing points and concentrated loads per manufacturer's requirements.
2. gap must be at top at all bearing locations and at bottom at concentrated loads.

12/S2 web stiffener detail

n.t.s.

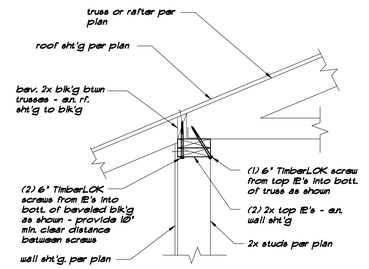

Footnote:

This detail is for uplift and shear transfer from the roof blk'g between the trusses to the lower wall using Fastenmaster 'TimberLOK' screws. These screws replace the RBC clips and HI tie specified on these plans. Simpson 'SDWC' screws are an approved equivalent to 'TimberLOK' screws.

13/S2 truss tiedown alternate

n.t.s.

REGISTERED PROFESSIONAL ENGINEER
58521PE
OREGON
JAN. 14, 2003
SHANE W. KIRBY

EXPIRES: 12-31-2017

This document and the ideas and designs incorporated herein, as an instrument of professional service, is the property of Structural Integrity LLC and is not to be used in whole or part, for any other project without the written authorization of Structural Integrity, LLC.

STRUCTURAL INTEGRITY, LLC
724 MAIN STREET, SUITE 214
KLAMATH FALLS, OR 97601
541.884.1081

DRAWN DATE 6/29/16

Gary West Living Trust
Single Family Residence
249 Hyatt Lane
Central Point, OR

TYPICAL DETAILS

JOB NUMBER	SHEET NO.
16090A	S2 4 OF 5

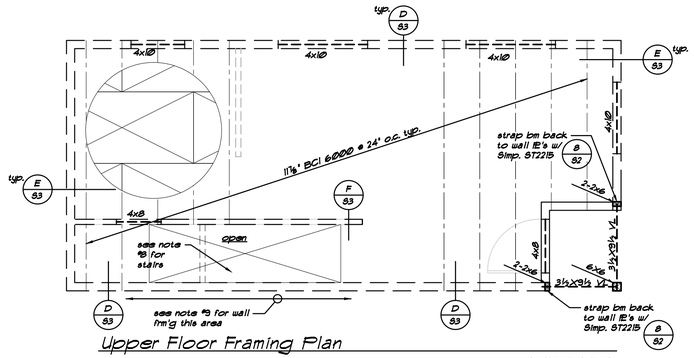

Upper Floor Framing Plan

SCALE: 1/4"=1'-0"

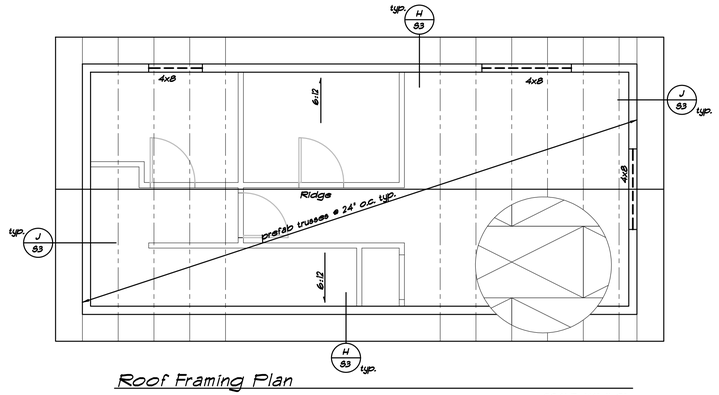

Roof Framing Plan

SCALE: 1/4"=1'-0"

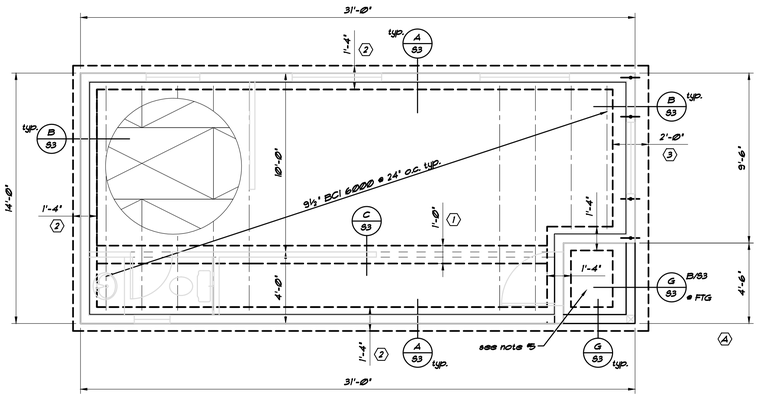

Foundation & Main Floor Framing Plan

SCALE: 1/4"=1'-0"

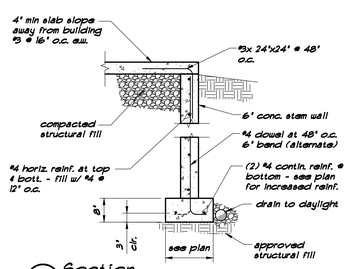

G/S3 Section

½" = 1'-0"

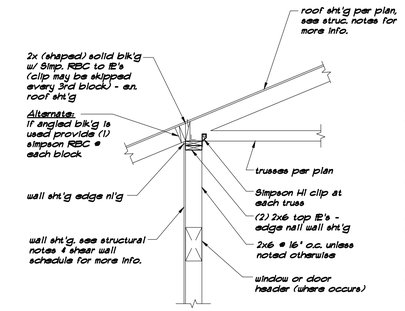

H/S3 Section

½" = 1'-0"

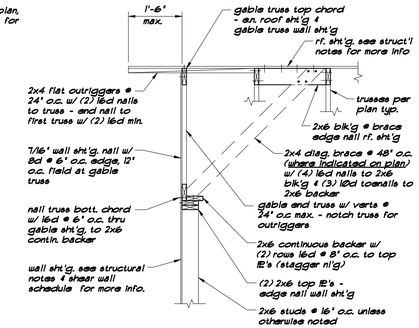

J/S3 Section

½" = 1'-0"

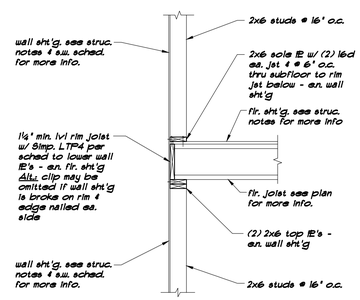

D/S3 Section

½" = 1'-0"

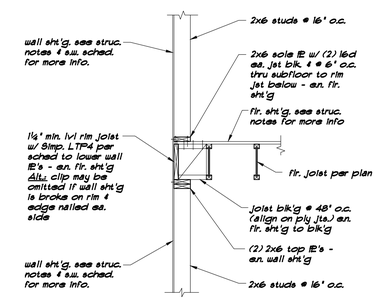

E/S3 Section

½" = 1'-0"

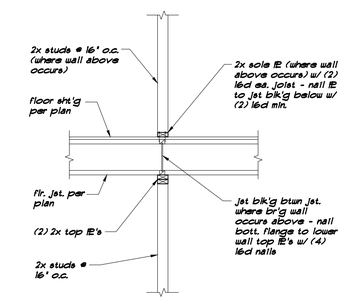

F/S3 Section

½" = 1'-0"

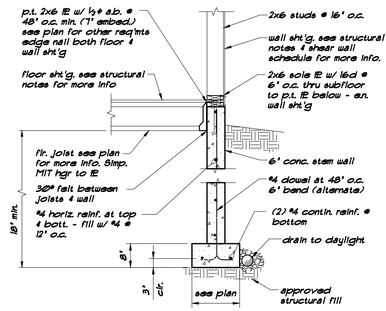

A/S3 Section

½" = 1'-0"

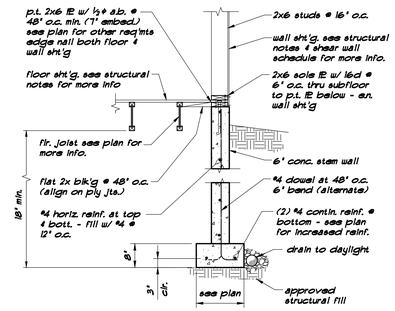

B/S3 Section

½" = 1'-0"

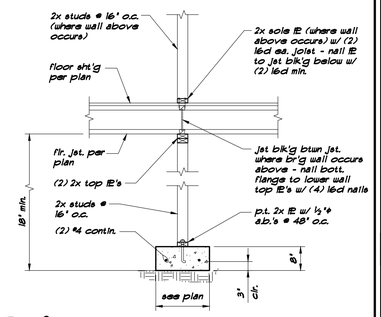

C/S3 Section

½" = 1'-0"

Structural Notes

1. See sheet S1 for structural notes & S11 typical details.
2. Details on these plans are intended to depict the general construction methods for this structure. Connections, details, and conditions not specifically shown that are similiar to those that are specified shall be assumed on and the same. If questions regarding the application of details are encountered, notify the Engineer for clarification in a timely manner prior to construction.
3. All exterior wood framed walls to be sheathed and nailed w/ 8d common nails at 6" o.c. edge, & 12" o.c. field nailing minimum, unless noted otherwise. Use otherwise, ½"ø a.b.'s (7" embed). Use 3x3x3/16" IE washers to p.t. mud sill IE. See shearwall schedule for increased nailing and bolting requirements. Simpson Titan anchor bolts or wedge anchors may be used in place of cast in place anchor bolts.
4. ⊠ indicates DF #1 post u.n.o. below upper floor framing. See callout this sheet for post size. All multiple stud posts shall be nailed together w/ (2) rows 16d @ 8" o.c. staggered. Use Simpson ABU base at isolated post locations unless noted otherwise.
5. 4" concrete slab w/ #3 @ 16" o.c. ea. way over 6" min. leveling course of crushed rock over undisturbed native soils or approved structural fill.
6. (-) indicates footing mark. See schedule this sheet for size and reinforcing.
7. All subgrade preparation to be completed in accordance with the Geotechnical Report & approved in the field per the Geotechnical Engineer or representative.
8. Use (3) 1-$\frac{3}{8}$"x14" LA 1800 Versalam stringers for each stair run. Use 1⅛" (48/24) tread material at stairs.
9. Use 2x6 full height studs @ 16" o.c. for wall indicated on plans. Use Simp. A35 clips from studs to p.t. below & top IE's above.
10. Provide and un-coated #4 or larger, reinforcing bar stubbed up at least 12" above the floor plate near the electric service or panel location. this stub must extend to & be tightly attached to at least a 20" section of reinforcing bar located in the footing.
11. Provide a listed non-removable hose bib backflow preventer at potable water outlets w/ hose attachments other than water heater drains and clothes washer connections. hose bibs shall be self chaining w/ integral backflow prevention.
12. Provide a 6 mil black polyethylene cover or approved alternate under heated slabs. lap 12 inches at all joints
13. Provide crawl space ventilation per 2014 ORSC one square foot per 150 square foot floor area, distribute to provide cross ventilation of crawl space.

Footing Schedule

mk	Size	Reinforcing
1	1'-0" x 8" continuous	(2) #4 longitudinal
2	1'-4" x 8" continuous	(2) #4 longitudinal
3	2'-0" x 8" continuous	(3) #4 longitudinal top & bottom

Footnote:
All footing reinforcing to be placed 3" clear from the bottom of the footing.

REGISTERED PROFESSIONAL ENGINEER
58521PE
OREGON
JAN. 14, 2009
SHANE W. BARR

EXPIRES: 12-31-2017

This document, and the ideas and designs incorporated herein, as an instrument of professional service, is the property of Structural Integrity, LLC and is not to be used, in whole or part, for any other project without the written authorization of Structural Integrity, LLC.

STRUCTURAL INTEGRITY, LLC
724 MAIN STREET, SUITE 214
KLAMATH FALLS, OR 97601
541.884.1081

DRAWN DATE 6/29/16

Gary West Living Trust
Single Family Residence
249 Hyatt Lane
Central Point, OR

FOUNDATION, FRAMING PLANS & DETAILS

JOB NUMBER 1609DA

SHEET NO. S3
5 OF 5