Gary West Living Trust 6-PLex

CODE INFORMATION

1. Project shall comply with the current editions of The following resources:
   1. 2014 Oregon Structural Specialty Code (OSSC)
   2. 2014 Oregon Plumbing Specialty Code (OPSC)
   3. 2014 Oregon Mechanical Specialty Code (OMSC).
   4. 2014 Oregon Specialty Electric Code (OSEC).
   5. 2014 Oregon Energy Efficiency Specialty Code (OEESC).
   6. 2014 Oregon Fire Code
2. Type of construction: VB - sprinkled per NFPA 13R
3. Occupancy per 2014 OSSC R2
4. Allowable area: 20,500 s.f.
   Actual Area: 2,224 s.f. each floor 3-story
5. Building height:
   Allowable = 4 stories, 65 ft. (20'-0" increase for sprinklers per Sect. 504)
   Actual = 3 stories, 37'-9" ft. (from finished grade to ridge)
6. Energy requirements:

wall	R-21
flat ceiling	R-49
floor (crawl space)	R-30
window	vinyl low-e, u=0.43, SHGC = 0.32
doors	u=0.10 max

VICINITY MAP

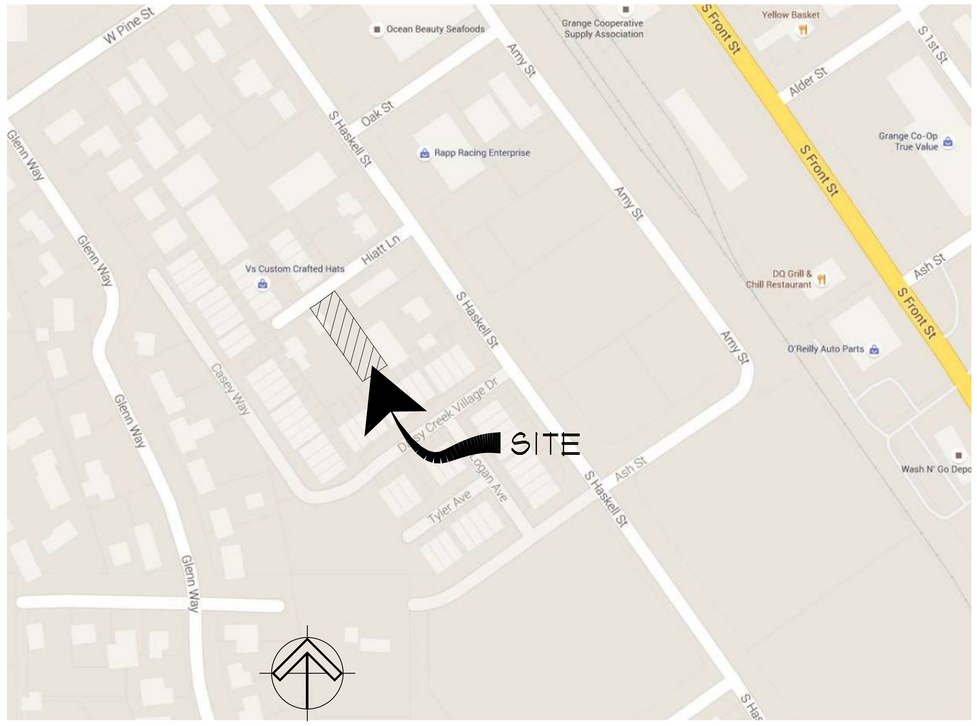

GENERAL NOTES

1. All construction shall comply with 2014 OSSC.
2. All construction shall be done in accordance with these plans.
3. All framing members have been designed for installed loading conditions only. The contractor shall handle, store, and install framing members in a manner not to damage or over stress these members.
4. Any substitutions for structural members, hardware or details shall be reviewed by the engineer. Such review will be billed on a time and materials basis to the general contractor with no guarantee that the substitution will be allowed.
5. Safety Note:
   a. It is the contractors responsibility to comply with the pertinent sections, as they apply to this project, of the "construction safety orders" issued by the State of Oregon latest edition, and all OSHA requirements.
   b. The owner and the structural engineer do not accept any responsibility for the contractor's failure to comply with these requirements.
   c. The contractor shall be responsible for adequate design and construction of all forms and shoring required.
6. The contractor shall notify the engineer where a conflict or discrepancy occurs between the drawings and any other portion of the contract documents or existing field conditions. Such notification shall be given in due time so as not to affect the construction schedule.
7. The contractor shall be responsible to clean and/or maintain existing public streets of soil, or other debris deposited by construction operations and repair all streets and utilities damaged by construction operations in a timely manner to avoid inconveniences or hazards to the public.
8. General contractor to verify all dimensions prior to construction. In the event of conflicts or changes between details or between the plans, notify the engineer immediately.
9. Install all manufactured items, materials and equipment in strict accordance with the manufacturer's specifications, unless otherwise specifically noted and approved by the engineer.
10. Do not scale drawings. contact the engineer for any dimensions not shown.
11. These drawings are not complete until reviewed and accepted by local building officials and signed by the owner and the engineer.
12. The contractor shall obtain all applicable permits prior to beginning construction.
13. Unless otherwise noted, all dimensions are to face of stud, rough concrete surface.
14. The general contractor is responsible for all demolition and construction methods, techniques, sequencing, and safety required for the work.
15. The general contractor is responsible for the design and general construction of all erection bracing, form work, and temporary shoring required for the work.
16. It is the responsibility of every contractor to insure work, details, and assemblies required for a complete installation, whether specifically detailed in these drawings or not, are completed.
17. The general contractor shall verify and be responsible for all mechanical, electrical, and plumbing (mep) conditions at the site and shall develop mechanical, electrical, and plumbing (mep) drawings and specifications to obtain all required permits and coordinate installation with real property owner.

DESIGN CRITERIA

DESIGN LOADS PER 2014 OSSC:

Floor Loads	40 PSF
Roof Loads:	
Roof - Dead	15 psf
Roof - Live	See Snow Loads
1603.13 - Snow Loads:	
Ground Snow Load, P_g	25 psf
Flat-roof Snow Load, P_f	Use 25 Psf Min.
Snow Exposure Factor, C_e	1.0
Snow Load Importance Factor, I_s	1.0
Thermal Factor, C_T	1.0
Wind Design Criteria:	
Basic Wind Speed (100 yr, 3-second Gust)	120 Mph
Wind Importance Factor, I_w	1.0
Wind Exposure	Exposure B
Earthquake Design Criteria:	
Seismic Importance Factor, I_e	1.0
Occupancy Category	Group II
Spectral Acceleration, S_s	0.613
Spectral Acceleration, S_1	0.335
Site Class	Site Class D
Spectral Response Coefficient, S_{DS}	0.538
Spectral Response Coefficient, S_{D1}	0.386
Seismic Design Category	Category D
Design Base Shear	V = Csw
Seismic Response Coefficient(s), C_s	0.828G Working Stress
Response Modification Factor(s), R	6.5

SPECIAL INSPECTION

No Special Inspection Required

DESIGN BUILD

This is a design build project and these documents are construction documents and are not intended to be "bid" documents. The information contained in these documents is the minimum required to build a safe code compliant structure. All finishes, door types, window types, plumbing and lighting fixtures must comply with the minimum guidelines found in these documents and all pertaining codes. But it is the contractor responsibility to coordinate these items with the owner.

The electrical, mechanical, and plumbing plans are the responsibility of the individual sub-contractors. Structural Integrity, LLC does not accept or assume any responsibility for the technical information found on said documents. The engineer of record will review said documents to insure the stability of the structure is not compromised. All work is to comply with the appropriate codes.

ABBREVIATIONS

ab	anchor bolt	ea	each
ac	asphaltic concrete	elev	elevation
add'l	additional	ew	each way
arch	architectural	exist, (e)	existing
alt	alternate	exp	expansion
bp	base plate	fdn	foundation
bldg	building	fin	finish
bm	beam	flr	floor
brg	bearing	ft	foot or feet
bot	bottom	ftg	footing
brcg	bracing		
blk	block	ga	gauge
		galv	galvanized
cj	control joint		
c|clr	clear	horz	horizontal
col	column	ht	height
conc	concrete		
conn	connect	in	inch or inches
cont	continuous,continuity		
cont'd	continued	reinf	reinforcing
det	detail	req'd	required
dia, ø	diameter		
dim	dimension	sched	schedule
		sht	sheet
lbs	pounds	sim	similar
		sect	section
max	maximum	sf	square feet
mb	machine bolt	sq	square
mezz	mezzanine	ss	stainless steel
min	minimum	std	standard
misc	miscellaneous	symm	symmetrical
no or #	number	ts	tube steel
nom	nominal	typ	typical
nts	not to scale		
		uno	unless noted otherwise
oc	on centers		
oh	opposite hand	vert	vertical
opp	opposite	w or w/	with
		w/o	without
pl , pl	plate	ws	waterstop
pt	pressure treated	wt	weight
		wwf	welded wire fabric

SHEET INDEX

1	Title Sheet	S1	Structural Notes
2	Floor Plans	S2	Standard Details
3	Elevations	S3	Foundation Plan and Details
4	Building Section, Wall Sections	S4	Floor Framing Plan & Details
		S5	Roof Framing Plan & Details
		S6	Lateral Plans

REGISTERED PROFESSIONAL ENGINEER
58521PE
OREGON
JAN. 14, 2009
SHANE W. KANE

EXPIRES: 12-31-2017

This document, and the ideas and designs incorporated herein, as an instrument of professional service, is the property of Structural Integrity, LLC and is not to be used, in whole or part, for any other project without the written authorization of Structural Integrity, LLC.

STRUCTURAL INTEGRITY, LLC
724 MAIN STREET, SUITE 214
KLAMATH FALLS, OR 97601
541.884.1081

DRAWN DATE 7/14/16

Gary West Living Trust
6-Plex
249 Hiatt Lane
Central Point, OR

TITLE SHEET

JOB NUMBER	SHEET NO.
16090	1 of 10

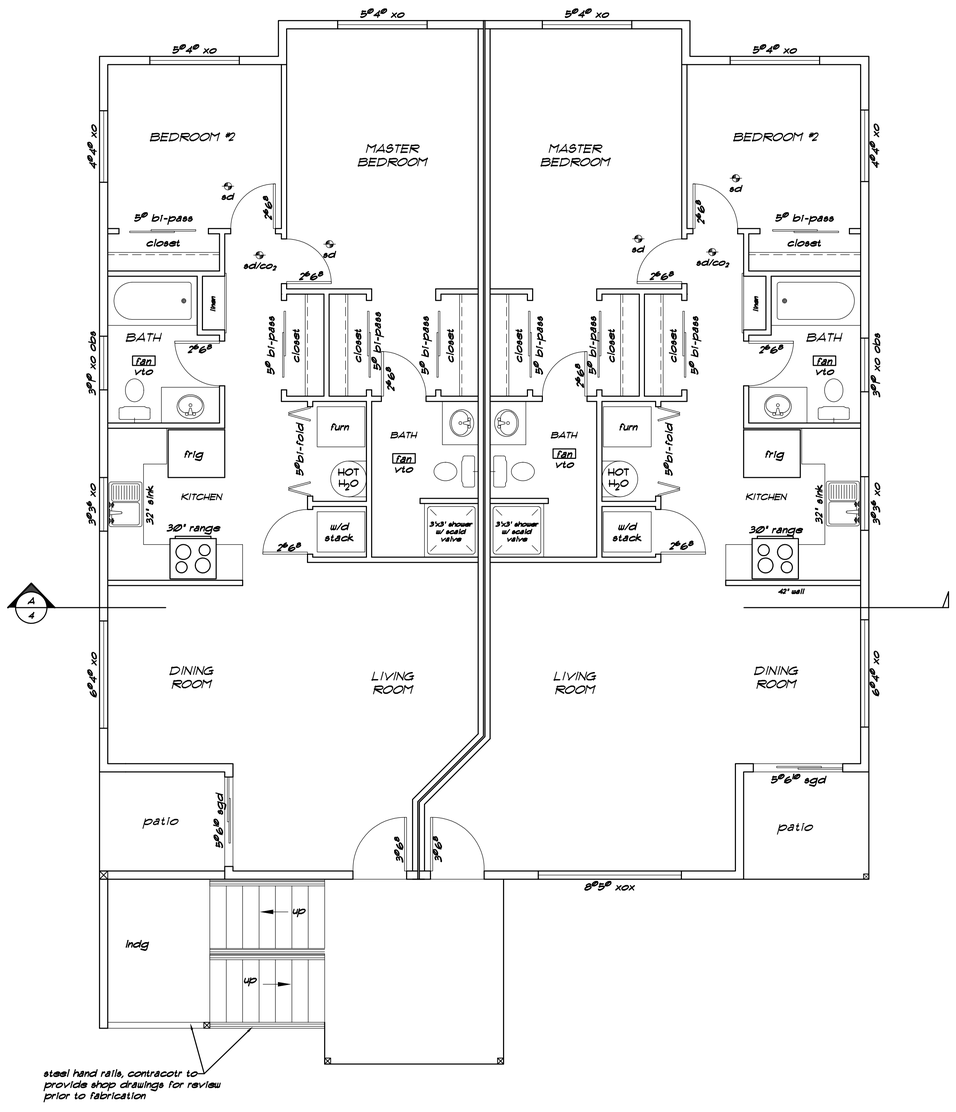

Floor Plan

1/4" = 1'-0"

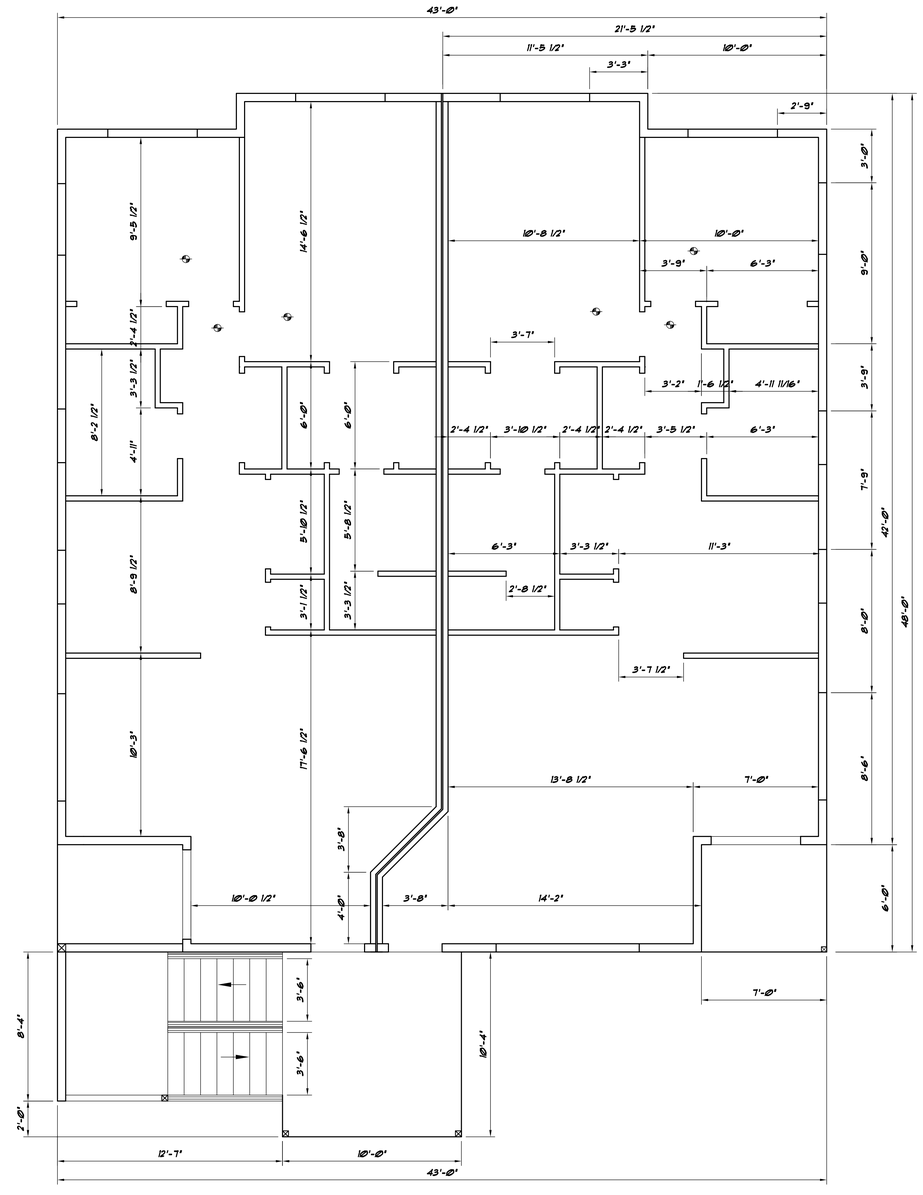

Dimensioned Floor Plan

1/4" = 1'-0"

GENERAL NOTES

1. All interior partitions are 2x4 @ 16" o.c., unless otherwise noted.
2. Interior wall liner is 1/2" gypsum wallboard typical. Greenboard is used behind plumbing fixtures from floor level to 4' above floor level and throughout tub and shower enclosures.
3. All construction shall conform to local codes and ordinances.
4. Details and notes shown on this sheet are typical and shall apply unless otherwise shown or noted. details on construction not fully shown shall be of the same nature as those shown for similar conditions. The contractor shall be responsible for verifying all dimensions, elevations, property lines and other related items on this job.
5. Bath and laundry rooms require operable window equal to 1/20th of the floor area with a minimum 1.5 sq. ft. or mechanical ventilation.
6. All bedrooms shall have one exterior door or operable window with a sill height not more than 44" above the floor w/ minimum net clear opening dimensions of 20"w. & 22"d and 5.7 sq. ft. net clear area.
7. Install smoke detectors in each sleeping room, in immediate vicinity outside sleeping areas, and on each story including basements. All detectors located outside sleeping areas shall be interconnected such that actuation of one alarm will actuate these alarms. provide primary power from building wiring with battery backup.
8. Provide safety glazing where nearest vertical edge of fixed or operable glazing is within a 24" arc of the closed door.
9. Provide attic access into all attic spaces over 30 s.f. and at least 30" of headroom. Access to be 22"x30" min.
10. Provide Crawl Space access minimum 18"x24", coordinate size with mechanical contractor and location with owner.

KEY NOTES

sd — smoke detector, see code notes sheet 1.1

sd/co2 — smoke detector and CO2 detector, see code notes sheet 1.1

REGISTERED PROFESSIONAL ENGINEER
58521PE
OREGON
JAN. 14, 2005
SHANE W. KARP

EXPIRES: 12-31-2017

This document, and the ideas and designs incorporated herein, as an instrument of professional service, is the property of Structural Integrity, LLC. and is not to be used, in whole or part, for any other project without the written authorization of Structural Integrity, LLC.

STRUCTURAL INTEGRITY, LLC
724 MAIN STREET, SUITE 214
KLAMATH FALLS, OR 97601
541.884.1281

DRAWN DATE 7/14/16

Gary West Living Trust
6-Plex
249 Hyatt Lane
Central Point, OR

Floor Plans

JOB NUMBER	SHEET NO.
16090	2 2 OF 10

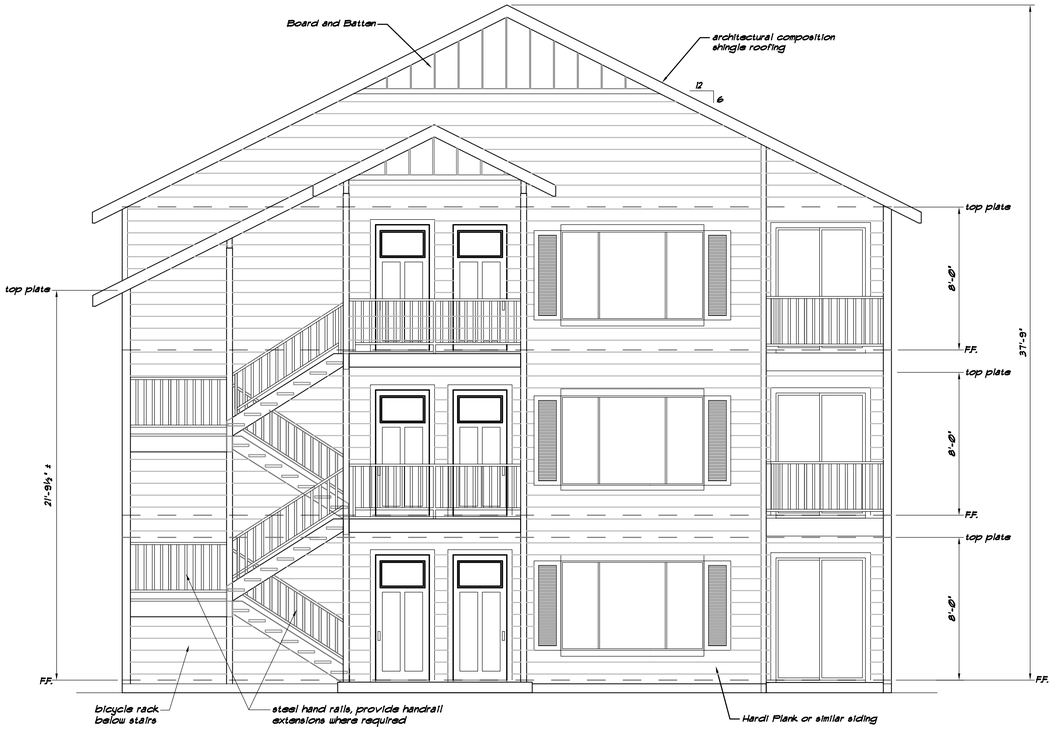

Front Elevation

1/4"=1'-0"

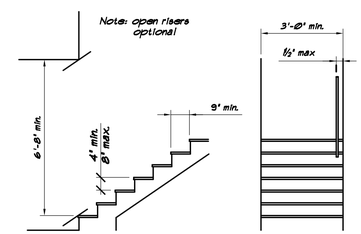

DETAIL STAIRS

STAIR & GUARD RAILING SPECIFICATIONS

General: when risers are closed treads may have a uniform projection not to exceed 1-1/2" to 12".

The greatest riser height w/in any flight shall not exceed the smallest by more than 3/8" stairways shall not be less than 3' in unobstructed, and the headroom rise & run shall conform to stair detail shown. Handrails may project from each side of stairway a distance of 3-1/2' into the required width.

The radius of curvature at the leading edge of tread to be 9/16' min. a nosing not less than 3/4' (19 mm) but not more than 1 1/4' (32 mm) shall be provided on stairways w/ solid risers. solid risers shall be vertical or sloped horizontally from the leading edge of the tread above at an angle of not more than 30° from the horizontal.

Exceptions nosing is not required where the tread depth is a min of 10" (254 mm)

Handrails handrails having a min height of 30' & a max height of 38', respectively measured vertically from the nosing of the treads shall be provided on at least one side of stairways having one or more risers. Spiral stairways shall have the required handrail located on the inside radius. all required handrails shall be continuous the length of the stairs. Ends shall be returned or shall terminate in newel posts or safety terminal's stellar space. The hand grip portion of the handrails shall not be more than 2-3/8' wide & no less than 1-1/4' in cross-sectional dimension, or the shape shall provide an equivalent gripping surface. The hand grip portion of handrails shall have a smooth surface with no sharp corners or razor edges.

Handrails projecting from the wall shall have a space of not less than 1-1/2' between the wall and the handrail.

Guardrails porches, balconies or raised floor surfaces located more than 30' above the floor or grade below shall have guardrails not less than 36' in height.

Open sides of stairways with a total rise of more than 30' above the floor or grade below shall have guardrails not less than 34' in height measured vertically from the nosing of the treads.

Required guardrails on open sides of stairways, raised floor areas, balconies & porches shall have intermediate rails or ornamental closures which will not allow passage of an object 4' or more in diameter and triangular openings max 6', horizontal spacing between the vertical members in required guardrails shall be a max of 4' on guardrails & 5' on the open sides of stairways at the farthest point between the members.

Exceptionthe triangular openings formed by the riser, tread & bottom rail of a guardrail at the open side of a stairway may be of such a size that a sphere 6' in diameter cannot pass through.

Illumination: automatic continuous or activation is not required for exterior stairs. controls for interior stairs shall be located at the top & bottom of the stairway.

RESIDENTIAL STAIR DETAIL

SCALE: nts

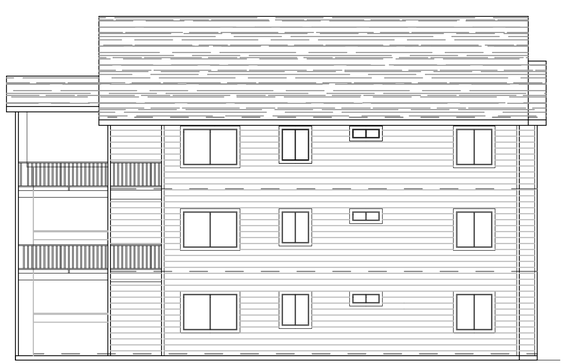

Right Elevation

1/8"=1'-0"

Left Elevation

1/8"=1'-0"

Rear Elevation

1/8"=1'-0"

REGISTERED PROFESSIONAL ENGINEER
58521PE
OREGON
JAN. 14, 2009
SHANE W. KANE

EXPIRES: 12-31-2017

This document, and the ideas and designs incorporated herein, as an instrument of professional service, is the property of Structural Integrity, LLC and is not to be used, in whole or part, for any other project without the written authorization of Structural Integrity, LLC.

STRUCTURAL INTEGRITY, LLC
724 MAIN STREET, SUITE 214
KLAMATH FALLS, OR 97601
541.884.1081

DRAWN DATE 7/14/16

Gary West Living Trust
6-Plex
249 Hyatt Lane
Central Point, OR

ELEVATIONS

JOB NUMBER 16090

SHEET NO. 3
3 OF 10

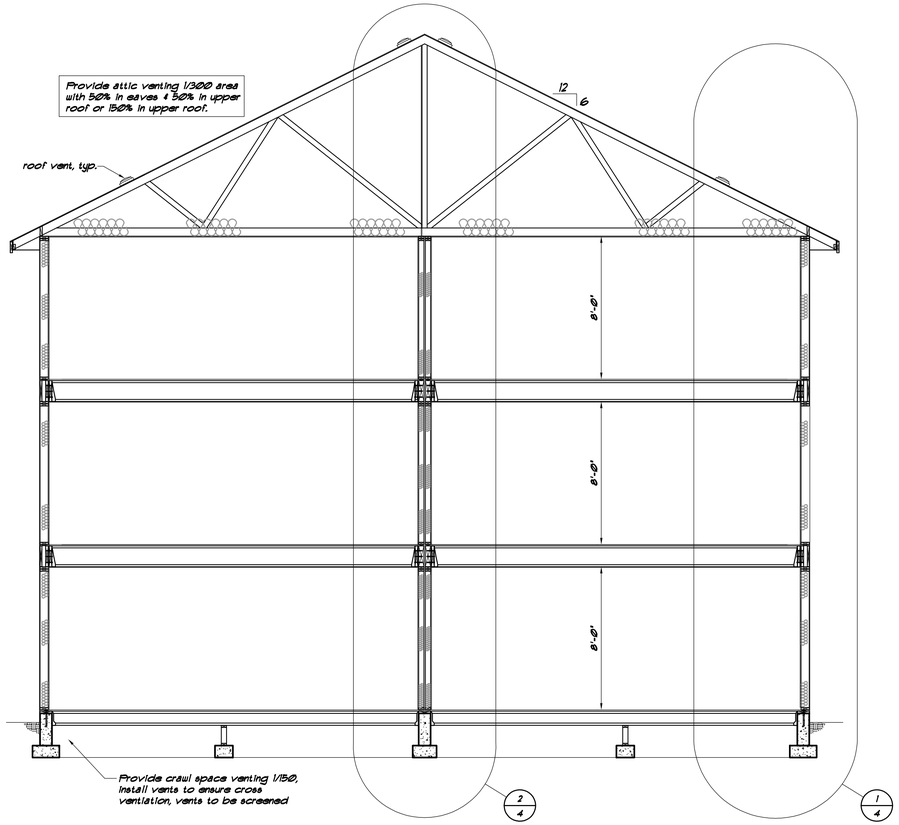

A/4 Building Section

1/4"=1'-0"

UL/CUL system no. W-L-1054

METAL PIPE THROUGH 1-HR or 2-HR GYPSUM WALL ASSEMBLY

F-rating = 1-hr or 2-hr

T-rating = 0-hr

L-rating at ambient = less than 1 cfm/sq ft

L-rating at 400F = 4 cfm/sq ft

FRONT VIEW

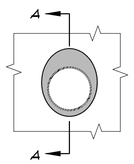

SECTION A-A

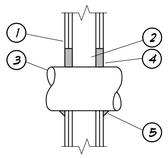

MATERIALS:

1. Gypsum wall assembly (ul/ulc classified w300 or u400 series) (1-hr or 2-hr fire-rating) (2-hr shown).
2. (not shown) wood studs to consist of nominal 2"x4" lumber. Steel studs to be minimum 2 1/2" wide.
3. penetrating item to be one of the following:
   A. Maximum 30" diameter steel pipe (schedule 10 or heavier)
   B. Maximum 30" diameter cast iron pipe
   C. Maximum 6" nominal diameter copper pipe
   D. Maximum 6" nominal diameter steel conduit.
   E. Maximum 4" nominal diameter emt.
4. Hilti fs-one high performance intumescent firestop sealant:
   A. Minimum 5/8", for a 1-hr fire-rating.
   B. Minimum 1 1/4" depth, for a 2-hr fire-rating
5. Minimum 1/2" bead of hilti fs-one high performance firestop sealant at point of contact.

NOTES:

1. Maximum diameter of opening:
   A. 32 1/4" for steel stud walls.
   B. 14 1/2" for wood stud walls.
2. Annular space = minimum 0", maximum 2 1/2"

FIRESTOP SYSTEM DETAIL

N.T.S.

Design No. - Intertek Labs - BTC/WA 60-01 (LPB/WA-60-01)
1-Hour Fire Rating from Both Sides of Wall
Bearing Wall - maximum loading of 2,145 lbs. per stud

Nominal 2" x 6" framing, spaced 16" o.c. min, with two top framing; plates and one bottom plate. Mineral wool insulation, nominal 25 pcf 5½ thick, pressure fit in the cavities between studs.

Minimum 7/16 category LP FlameBlock with Pyrotite exterior: treatment facing the exterior, fastened to studs with minimum 1⅝" 6d nails, spaced 6" o.c. on perimeter and 12" in the field. Horizontal joints are to be staggered with those of interior GWB. Code-compliant building wrap installed per manufacturer's instructions. Wood, wood composite, fiber cement, stucco or steel exterior facing options per intertek listing, installed per manufacturers instructions.

Any classified 5/8" Type X GWB, applied vertically and interior: nailed to studs with minimum 1⅝" drywall nails or code-compliant screws, spaced 8" o.c. Wallboard joints must be covered with tape and joint compound, and fastener heads covered with joint compound.

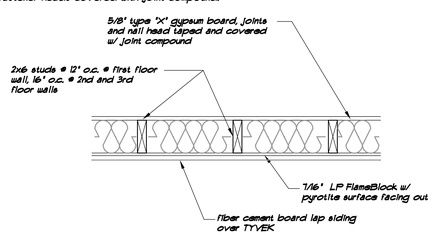

3/4 1-hr Fire Wall Detail

GA FILE NO. UP 3370

one layer 5/8" type 'x' gypsum board applied parallel or @ right angles to each side of double row 2x4 studs @ 16" o.c. with 6d coated nails, 1⅝" long 0.0915" @ shank, 1/4" heads 7" o.c.

Joints staggered 16" opposite sides. Horizontal bracing required @ mid height.

(45 - 49 STC)

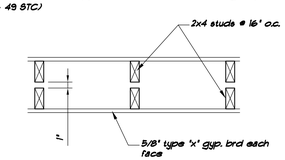

4/4 1-hr Fire Wall Detail

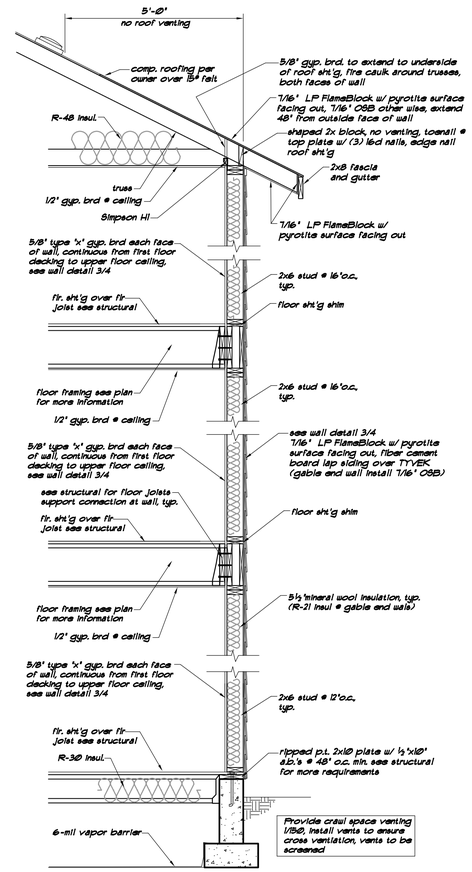

1/4 Fire Wall (5'-0"-10'-0" from property line)

n.t.s.

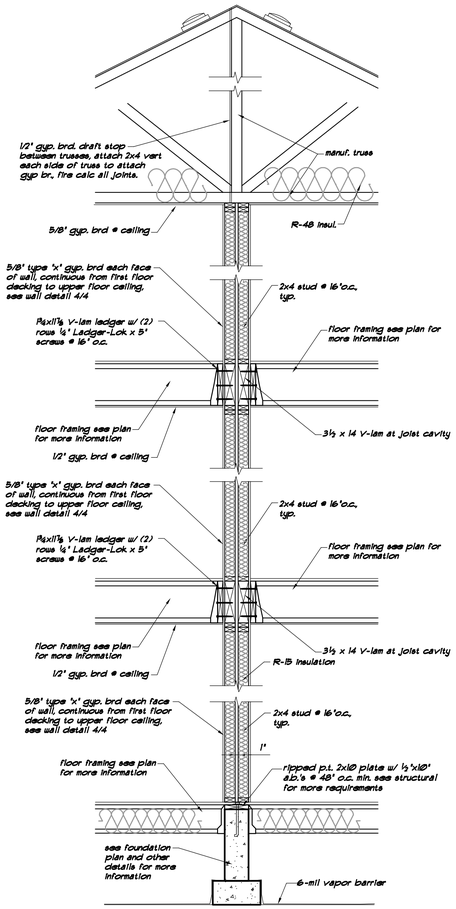

2/4 Unit Seperation Wall Section

n.t.s.

REGISTERED PROFESSIONAL ENGINEER
58521PE
OREGON
JAN. 14, 2009
SHANE W. KANE

EXPIRES: 12-31-2017

This document, and the ideas and designs incorporated herein, as an instrument of professional service, is the property of Structural Integrity, LLC. and is not to be used, in whole or part, for any other project without the written authorization of Structural Integrity, LLC.

STRUCTURAL INTEGRITY, LLC
724 MAIN STREET, SUITE 214
KLAMATH FALLS, OR 97601
541.884.1081

DRAWN DATE 7/14/16

Gary West Living Trust
6-Plex
249 Hyatt Lane
Central Point, OR

SECTIONS

JOB NUMBER	SHEET NO.
16090	4 4 OF 10

STRUCTURAL NOTES

GENERAL:

1. These structural notes supplement the drawings. Any discrepancy found among the drawings, these notes, and any site conditions shall be reported in a timely manner to the engineer, who shall respond to any discrepancy in writing. Any work done by the Contractor after discovery of such discrepancy shall be done at the Contractor's own risk.
2. The Contractor shall verify and coordinate the dimensions among all drawings prior to proceeding with any work or fabrication.
3. The Contractor is responsible for all demolition and construction methods, techniques, sequencing, and safety required for the work.
4. The Contractor is responsible for the design and construction of all erection bracing, form work, and temporary shoring required for the work.
5. Where no specific detail is shown, the construction shall be identical or similar to that indicated for like cases of construction on this project. Should there be any question, contact the Engineer prior to proceeding.
6. Any substitutions for structural members, hardware or details shall be reviewed by the Engineer. Such review will be billed on a time and materials basis to the general contractor with no guarantee that the sustitution will be allowed.
7. Do not scale drawings. contact the Engineer for any dimensions not shown.

DESIGN CODE:

1. 2014 Oregon Structural Specialty Code
2. All reference to other codes and standards (ACI, ASTM, etc.) shall be for the latest or most current edition available. design loads per 2010 OSSC:

Floor Loads	40 PSF
Roof Loads:	
Roof - Dead	15 psf
Roof - Live	See Snow Loads
1603.13 - Snow Loads:	
Ground Snow Load, Pg	25 psf
Flat-roof Snow Load, Pf	Use 25 Psf Min.
Snow Exposure Factor, Ce	1.0
Snow Load Importance Factor, Is	1.0
Thermal Factor, C_T	1.0
Wind Design Criteria:	
Basic Wind Speed (1100 yr, 3-second Gust)	120 Mph
Wind Importance Factor, Iw	1.0
Wind Exposure	Exposure B
Earthquake Design Criteria:	
Seismic Importance Factor, Ie	1.0
Occupancy Category	Group II
Spectral Acceleration, Ss	0.619
Spectral Acceleration, S1	0.335
Site Class	Site Class D
Spectral Response Coefficient, S_{Ds}	0.538
Spectral Response Coefficient, S_{D1}	0.386
Seismic Design Category	Category D
Design Base Shear	V = Csw
Seismic Response Coefficient(s), Cs	0.828G Working Stress
Response Modification Factor(s), R	6.5

FOUNDATIONS:

1. Maximum design soil bearing pressure = 1500 psf, no soils report available.
2. Footing elevations shown on drawings are to bottom of footing.
3. Footings shall be founded on firm, undisturbed soil.
4. All footings shall be a minimum of 1'-6" below final grade.
5. Bottom of footings shall be stepped from elevation to elevation at 2'-0" horizontal to 1'-0" vertical steps or shall be sloped not to exceed 1 vertical to 10 horizontal when approved by the Engineer.

CONCRETE (CAST IN PLACE):

1. All concrete shall be normal weight and shall develop a minimum 28 day laboratory cured compressive-cylinder strength of:
   3000 psi for all concrete - design 2500 psi (no special inspection required)
2. Concrete, forms, mixing, placing and curing shall conform to aci manual of concrete practice, latest edition, and specifications.
3. Concrete shall have a maximum slump of 4 inches.
4. Concrete shall be placed in one continuous operation.
5. Size and location of sleeves through floors or walls for mechanical or electrical access shall be approved by the engineer prior to placing concrete.
6. All bolts in concrete shall conform to astm specification A307 and shall be of the size indicated on the drawings.

REINFORCING STEEL:

1. Reinforcing bars shall be new billet steel and shall conform to:
   ASTM A615 grade 60 for all reinforcement.
   ASTM A615 grade 40 for beams, stirrups, column ties and as noted.
2. All welded reinforcing steel, metal inserts and connections shall conform to IBC standards.
3. Welded wire fabric shall conform to ASTM A185.
4. Reinforcement shall be detailed, fabricated and placed in accordance with ACI Code 318 and ACI Manual 315, unless otherwise noted. all reinforcement shall be free of loose mill and rust scale, oil, dirt and coatings of any manner that will reduce bond. all reinforcement shall be continuous with adequate laps.
5. Reinforcement shall be secured in forms with suitable ties and anchorage to prevent displacement. Bars adjacent to earth shall be supported by cement mortar cubes.
6. The following minimum concrete cover shall be provided for reinforcement:
   a) concrete cast against earth . . . . . 3"
   b) concrete exposed to earth or weather
      #6 and larger. . . . . 2"
      #5 and smaller. . . . . 1-1/2"
   c) concrete not exposed to earth or weather
      slabs, walls and joists, #11 and smaller. . . 3/4"
      beams and columns. . . . . 1-1/2"
7. Place 2'-0" x 2'-0" bars at corners and intersections for walls and foundations equal in size and spacing to horizontal reinforcing.
8. Reinforcement splices, shall be 44 dia. (24" min.) laps.
9. Unless noted otherwise, provide shrinkage & temperature reinforcement in all slabs.
10. Provide carrier bar #5 @ 3'-0" o.c. max. spacing for all slab, joist and wall reinforcing not supported by other transverse reinforcing.

SAWN FRAMING LUMBER:

1. All sawn lumber shall be Douglas Fir, S-4S, graded in accordance with WCLIB rules #16, of the following grades:
   studs, joists, plates, headers, blocking: no. 2
   4x beams: no. 2
   6x beams, posts: no. 1
2. All 2x lumber shall be S-dry, u.n.o.
3. Double all joists under all parallel partitions.
4. All wood in permanent contact with concrete or masonry to be pressure treated. treat all cut ends.

METAL PLATE CONNECTED TRUSSES:

1. Metal plate connected trusses shall be designed and manufactured in accordance with "Design Specifications for Light Metal Plate Connected Wood Trusses", TPI-24 as published by the Truss Plate Institute and shall be designed for the following minimum loads:

top chord.	25 psf live load
. .	8 psf dead load
bottom chord.	10 psf live load (not concurrent with top chord live load)
	9 psf dead load
net uplift (wind). . . .	12 psf

2. The truss manufacturer shall submit designs, stress diagrams, shop drawings and calculations bearing the stamp of a (structural) Engineer registered in the State Of Oregon to the Engineer-Of-Record for review.
3. The truss manufacturer shall supply all hardware, anchorage, and metal seats required, and shall design and indicate bracing required to be supplied by the General Contractor.
4. Lower chords shall be cambered to provide for dead load deflection at gypsum board ceiling.
5. All connection plates shall develop the full stress in member with a minimum transfer at any member of 2000 lbs. and minimum size of plates of 3" x 5".
6. Truss supplier shall review all of the truss, bridging, hanger, blocking and web stiffener requirements and all concentrated loads prior to truss fabrication.
7. Contractor to coordinate with truss manufacturer all mechanical loads and locations.

NAILING AND FASTENERS:

1. Nailing indicated on plans and details are "common" nails. Minimum framing nailing shall conform to IBC table 23-11-b-1. See details for additional typical nailing requirements. Substitution of nails other than "common" is not permitted without prior approval.
2. Power driven nails other than "common" nails may be used if data is submitted and approved prior to use.
3. Plywood nailing shall be as follows:
   a) roof sheathing:. . . . . 8d at 6" o.c. at all panel edges
      8d at 12" o.c. at all intermediate supports
   b) floor sheathing:. . . . . 10d at 6" o.c. at all panel edges
      10d at 10" o.c. at all intermediate supports
   c) wall sheathing:. . . . . block all edges with 2 x 4 flats, nailing as indicated on drawings.
4. All bolted connections shall be made with machine bolts (m.b.) conforming to ASTM A307. all bolts and lags shall be installed with standard wrought washers, unless noted otherwise.
5. Joist hangers, hold downs, and other framing accessories are referred to on plans by particular types as manufactured by Simpson Company - San Leandro, ca. All hardware is to be fastened per manufacturer's specifications, u.n.o.
6. Epoxy anchor bolts indicated on drawings shall be as manufactured by Hilti Co. or approved equal. Depth of embedment shall be as called for on the drawings. Install as recommended by the manufacturer with C-28 grout.
7. Sills at walls shall be bolted to concrete with 1/2" diameter x 10" long anchor bolts or 1/2" diameter epoxy anchor bolts at 4'-0" o.c. maximum and within 1'-0" of sill plate ends, corners or splices, unless detailed otherwise.

STRUCTURAL SHEATHING

1. All sheathing shall be as follows:
   a) roof sheathing. . . . 19/32", Index 32/16
   b) floor. . . . . 7/8" T&G, Index 48/24
   c) walls. . . . . 19/32", Index 32/16
2. Floor and roof plywood shall be installed with face grain perpendicular to supports and end joints shall be staggered.
3. Provide 1 ply clip per span @ unsupported edge of roof sheathing where support spacing exceeds 16" o.c. u.n.o. as blocked edges.
4. Block all wall sheathing with 2 x 4 blocking at all edges.
5. All floor sheathing shall be glued to supporting joist w/ subfloor adhesive.

NAILING SCHEDULE

Connection	Nailing
joist to sill or girder, toe nail	3-8d
bridging to joist, toenail each end	2-8d
sole plate to joist or blocking, typical face nail	16d @ 12" o.c.
sole plate to joist or blocking, at braced panels	4-16d per 12'
top plate to stud, end nail	2-16d
stud to sole plate	4-8d toenail, 2-16d end nail
double studs, face nail	16d @ 24" o.c.
double top plates, typical face nail	16d @ 16" o.c.
double top plates, lap splices	12-16d equally spaced
blocking between joists or rafters to top plate, toenail	3-8d
rim joist to top plate, toe nail	16d @ 6" o.c.
top plates laps and intersections, face nail	2-16d
continuous header, two pieces	16d @ 16" o.c.
ceiling joist to top plate, toe nail	3-8d
continuous header to stud,toenail	4-8d
header to king stud, end nail	3-16d
ceiling joists, laps over partitions, face nail	3-16d
ceiling joists to parallel rafters, face nail	3-16d
rafter to plate, toenail	3-8d
built up corner studs	16d @ 24" o.c.
multiple stud post	16d @ 8" o.c.
wood structural wall panels	8d common @ 6" o.c. panel edges 8d common @ 12" o.c. field
roof structural sheathing	8d common @ 6" o.c. panel edges 8d common @ 12" o.c. field
floor structural sheathing	10d common @ 6" o.c. panel edges 10d common @ 12" o.c. field

1. Common or box nails can be used except where otherwise stated.
2. Minimum nailing requirements, other nailing requirements may be specified in the construction documents.

BOISE CASCADE PRODUCTS:

1. Roof and floor framing designated "BCI", "V-Lam", shall be the type and size indicated on drawings, as manufactured by Boise Cascade, Inc.
2. Laminate multiple joists where indicated on drawings as per joist manufacturer's recommendations.
3. Contractor to verify all weights and locations of concentrated loads due to roof top mechanical units, mechanical piping, electrical units, folding partitions and other concentrated loads prior to joist fabrication.
4. Camber all joists as per manufacturer's recommendations.
5. If joists are supplied other than those specified, the joists supplied shall meet or exceed the shear capacity, moment capacity, and stiffness properties of the joist specified. all substitutions must be approve by the Engineer.

GLUE LAMINATED MEMBERS:

1. All glue laminated timber beams shall be Douglas Fir 24F-V4 at all simple beams and grade 24F-V8 at all cantilever and continuous beams, unless otherwise specified on the drawings.
2. All glulam timber shall be fabricated in accordance with AITC 117-93 manufacturing, using Douglas Fir lumber and waterproof adhesive. each member shall bear an AITC identification mark and be accompanied by an AITC certificate of conformance.
3. Glulam timber beams shall have camber as indicated on the drawings.
4. All Glulam members shall be notched, shaped and finished as per plans and specifications.
5. See specifications (if provided) for finish and protection.

ABBREVIATIONS

a.b. -------	anchor bolt		
btwn ------	between	(n) -------	new
blk ------	block	n.s. -------	near side
c.j. -------	construction joint	n.t.s. ------	not to scale
clr -------	clear	oc -------	on center
contin -----	continuous	oh -------	opposite hand or overhang
cp. -------	complete penetration	pc -------	pieces
csk -------	countersink	p.p. -------	partial penetration
d.f. -------	douglas fir	p.t. ------	pressure treated
dl -------	dead load	rhs ------	round head wood screw
do -------	ditto	sc -------	shear connector (3/4")
(e) -------	existing	sp -------	structural plywood
e.j. -------	expansion joint	stfnr ------	stiffener
e.n. -------	edge nailing	stggrd -----	staggered
e.w.e.f. ----	each way each face	t & b -----	top & bottom
fb -------	face of block	t & g -----	tongue & groove
fc -------	face of concrete or framing clip(Simpson A35)	t.n. -------	toe nail
		ts -------	top of slab
fhws ------	flat head wood screw	t.o.s. ------	top of steel
fp -------	face of plywood	u.n.o. ------	unless noted otherwise
fs -------	face of stud	w/ -------	with
f.a. -------	far side	w/o ------	without
gd -------	gauge	wp. -------	work point
hsb ------	high strength bolt(a-325)	wwf ------	welded wire fabric
ht. -------	height	℄ --------	centerline
j.h. -------	joist hanger (simpson)	⊞ --------	plate
ll --------	live load	# --------	number or pounds
l.s. -------	lag screw	▯ --------	square
lt. wt. -----	light weight	○ --------	round
m.i. -------	malleable iron	▨ -------	continuous wood in section
		▨ -------	wood blocking in section

REGISTERED PROFESSIONAL ENGINEER
58521PE
OREGON
JAN. 14, 2003
SHANE W. KASP

EXPIRES: 12-31-2017

This document, and the ideas and designs incorporated herein, as an instrument of professional service, is the property of Structural Integrity, LLC and is not to be used, in whole or part, for any other project without the written authorization of Structural Integrity, LLC.

STRUCTURAL INTEGRITY, LLC
724 MAIN STREET, SUITE 214
KLAMATH FALLS, OR 97601
541.884.1081

DRAWN DATE 7/14/16

Gary West Living Trust
6-Plex
249 Hyatt Lane
Central Point, OR

STRUCTURAL NOTES

JOB NUMBER 16030

SHEET NO. S1
5 OF 10

STANDARD STRUCTURAL DETAILS

applicable only to structural drawings by
Structural Integrity LLC

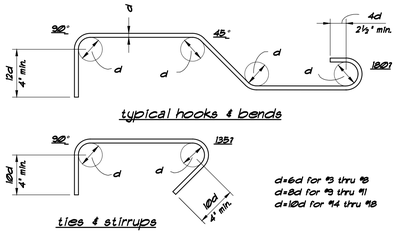

typical hooks & bends

ties & stirrups

d=6d for #3 thru #8
d=8d for #9 thru #11
d=10d for #14 thru #18

1/S2 rebar hooks & bends

n.t.s.

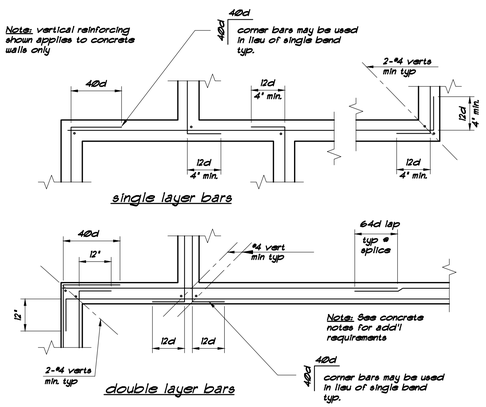

single layer bars

double layer bars

2/S2 corner reinforcing at concrete walls & footings

n.t.s.

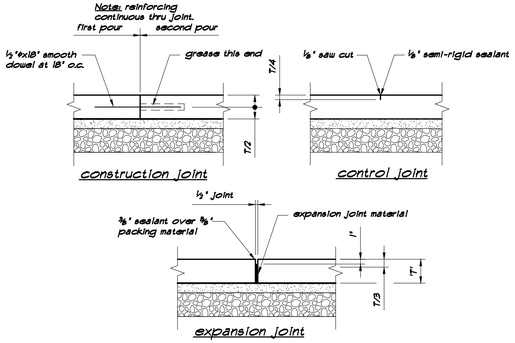

construction joint

control joint

expansion joint

Note: Construction joints & control joints shall divide slab into areas not exceeding 100 sq. ft. without reentrant corners & with length to width ratios not exceeding 1½ to 1. Contractor shall submit layout plan showing proposed control and construction joint locations. Joint spacing shall not exceed 10 feet in either direction. Semi-rigid sealant to be Metzger/ Meguire 999-80" or equal.

3/S2 slab-on-grade joints

n.t.s.

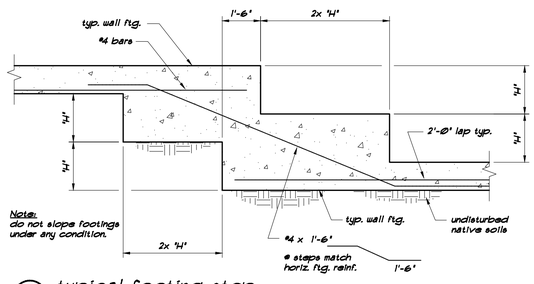

Note:
do not slope footings under any condition.

4/S2 typical footing step

n.t.s.

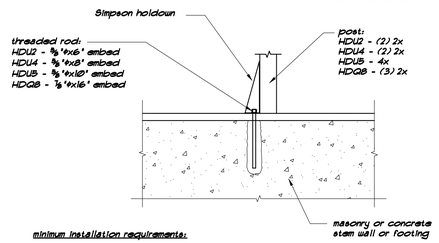

minimum installation requirements:

1. drill - drill hole to specified diameter and depth.
2. clean - remove dust from hole with oil-free compressed air. clean with nylon brush and blow out remaining dust. note: dust left in hole can reduce the adhesive's holding capacity.
3. fill - fill hole 1/2 - 2/3 full, starting from bottom of hole to prevent air pockets. withdraw nozzle as hole fills up.
4. insert - anchors must be clean and oil free. insert anchor, turning slowly until the anchor contacts the bottom of the hole. do not disturb during cure time.

5/S2 epoxy bolt holdown detail

n.t.s.

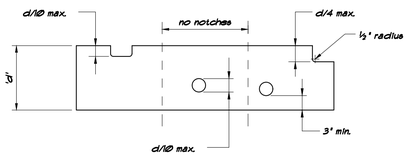

Notes:

1. predrill corners of notches so as not to over cut.
2. notches on the ends of joists & headers shall not exceed ¼ of the joist depth.
3. notches in the top of joists shall not exceed 1/6 the depth and shall not be located in the middle third of the span.
4. notches in the bottom of joists allowed only where specifically shown on drawings.
5. holes bored in joists shall not be within 3" of the top or bottom and shall not have a diameter larger than 1/4 the depth of the joist.

6/S2 notches for jst. & hdrs.

n.t.s.

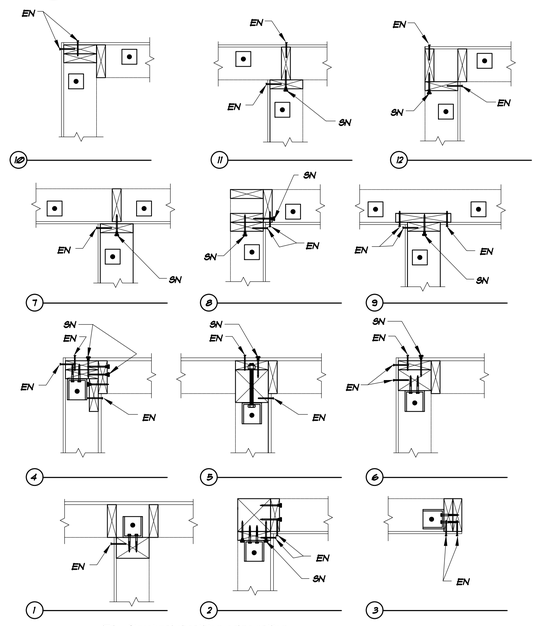

EN - Structural sheathing edge nailing
SN - Structural nailing per nailing schedule or other details

- Holdown per plan

- Anchor bolt w/ 3x3 plate washer per plan

7/S2 corner framing details

n.t.s.

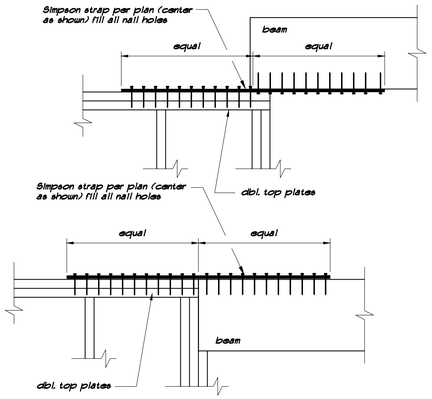

8/S2 drag strut details

n.t.s.

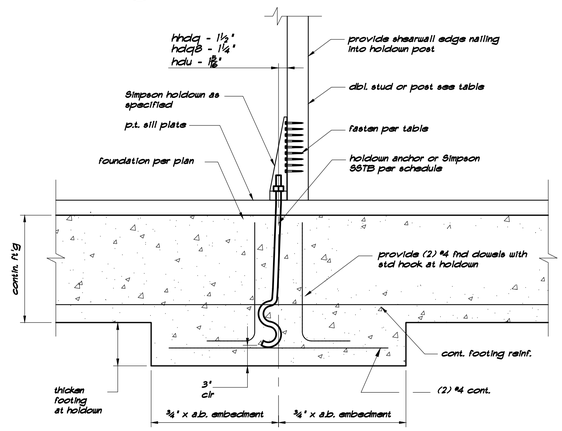

Notes:

1. holdowns noted on plan are to be located a minimum of 6" from the end of the shear wall.
2. laminate double studs together with 2 rows 10d nails at 4" o.c.

9/S2 typical Simpson holdown detail

n.t.s.

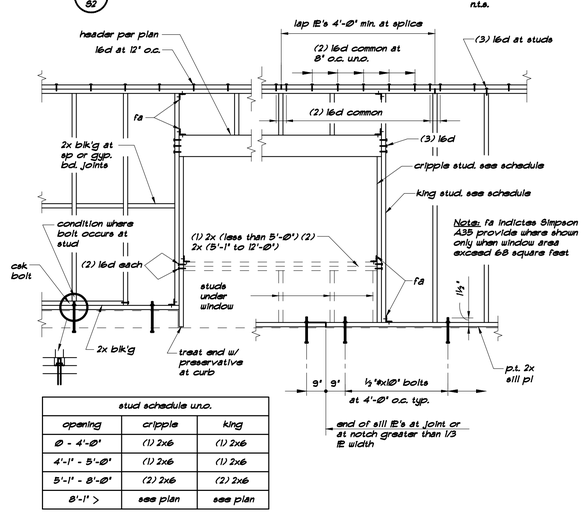

stud schedule uno.		
opening	cripple	king
0 - 4'-0"	(1) 2x6	(1) 2x6
4'-1" - 5'-0"	(1) 2x6	(1) 2x6
5'-1" - 8'-0"	(2) 2x6	(2) 2x6
8'-1" >	see plan	see plan

10/S2 typical stud wall & opening detail

n.t.s.

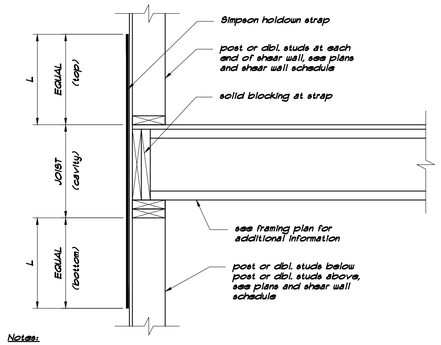

Notes:

1. holdowns noted on plan are to be located a minimum of 6" from the end of the shear wall.
2. laminate double studs together with 2 rows 10d nails at 4" o.c.
3. wrap and nail strap to beam/header below if applicable

11/S2 typical Simpson strap holdown detail

n.t.s.

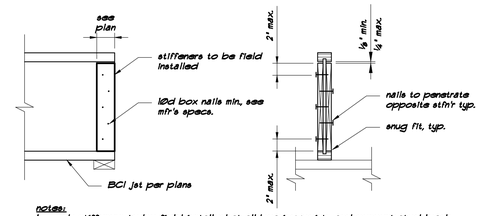

notes:

1. web stiffeners to be field installed at all bearing points and concentrated loads per manufacturer's requirements.
2. gap must be at top at all bearing locations and at bottom at concentrated loads.

12/S2 web stiffener detail

n.t.s.

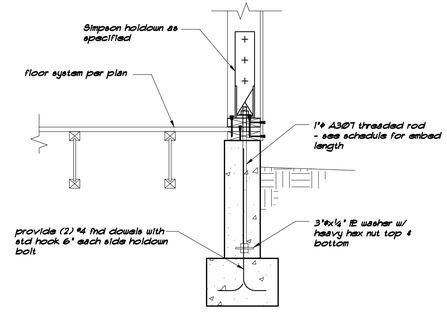

13/S2 HHDQ holdown detail

n.t.s.

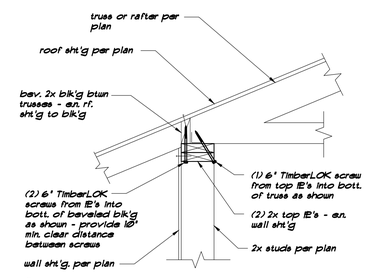

Footnote:

This detail is for uplift and shear transfer from the roof blk'g between the trusses to the lower wall using Fastenmaster "TimberLOK" screws. These screws replace the RBC clips and HI tie specified on these plans. Simpson "SDWC" screws are an approved equivalent to "TimberLOK" screws.

14/S2 truss tiedown alternate

n.t.s.

REGISTERED PROFESSIONAL ENGINEER
58521PE
OREGON
JAN. 14, 2003
SHANE W. KIRP

EXPIRES: 12-31-2017

This document and the ideas and designs incorporated herein, as an instrument of professional service, is the property of Structural Integrity, LLC and is not to be used in whole or part, for any other project without the written authorization of Structural Integrity, LLC.

STRUCTURAL INTEGRITY, LLC
724 MAIN STREET, SUITE 214
KLAMATH FALLS, OR 97601
541.884.1081

DRAWN DATE 7/14/16

Gary West Living Trust
6-Plex
249 Hyatt Lane
Central Point, OR

TYPICAL DETAILS

JOB NUMBER 16090

SHEET NO. S2
6 OF 10

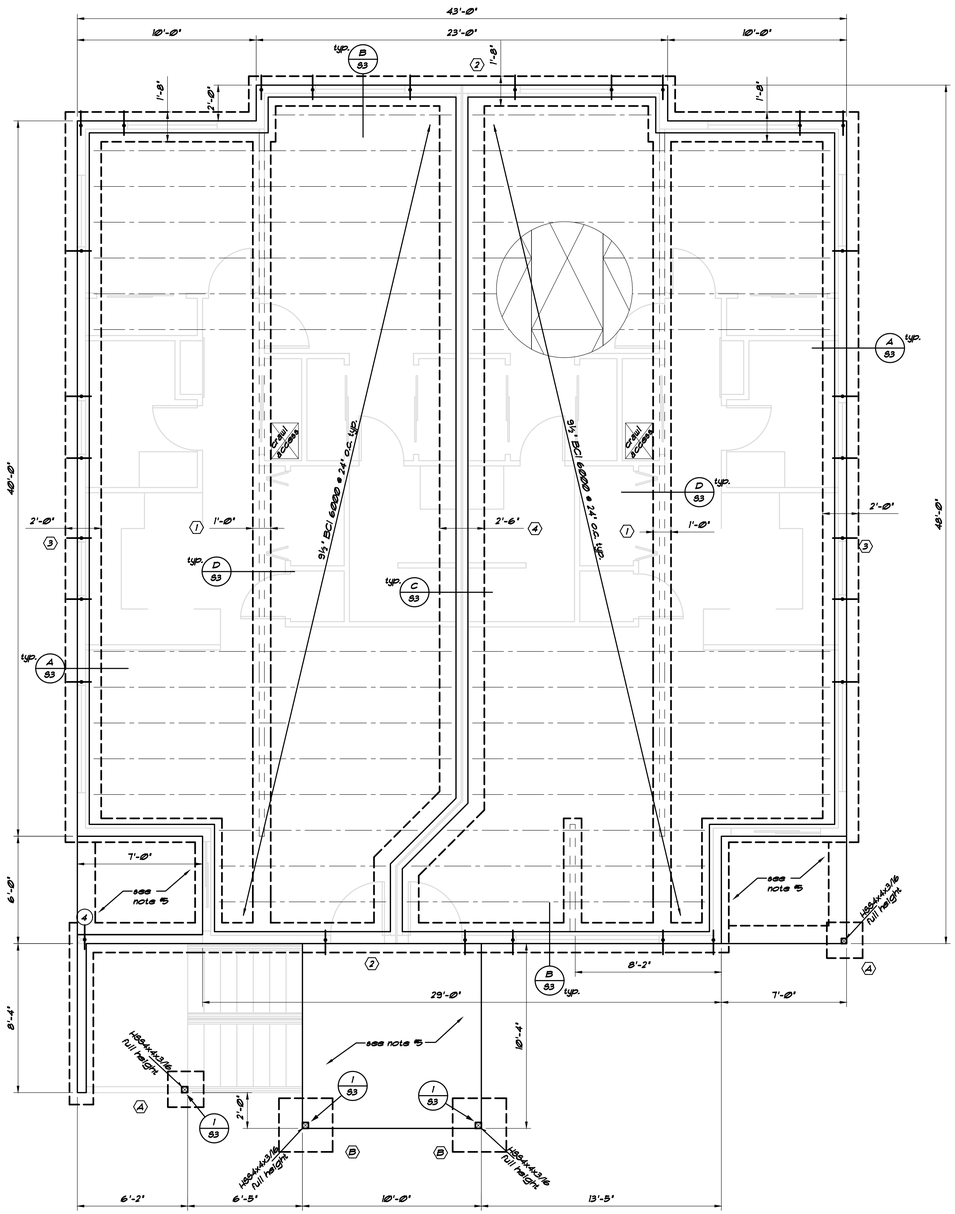

Foundation & Main Floor Framing Plan

SCALE: 1/4"=1'-0"

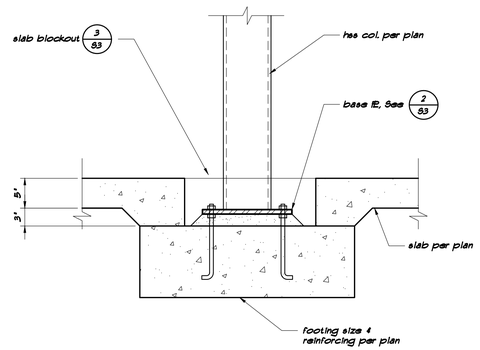

1/S3 column slab detail

n.t.s.

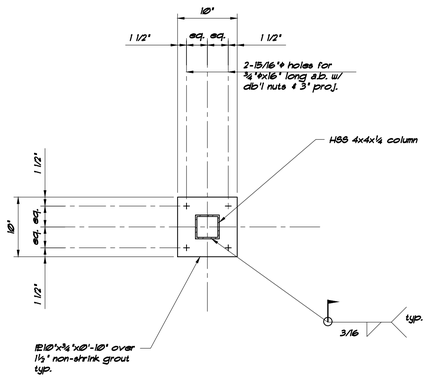

2/S3 detail

n.t.s.

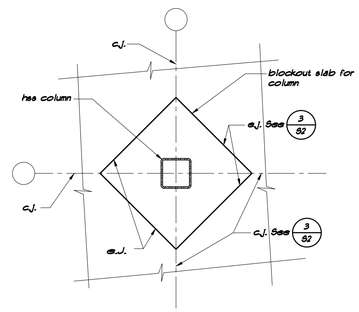

3/S3 column slab detail

n.t.s.

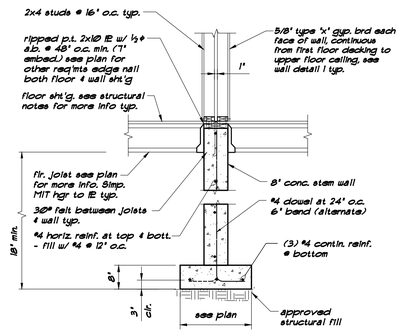

C/S3 Section

½" = 1'-0"

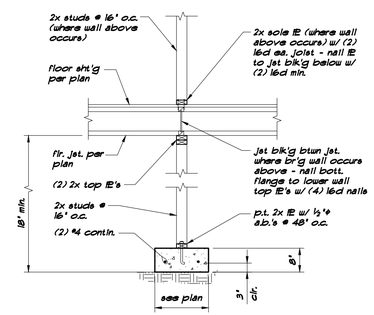

D/S3 Section

½" = 1'-0"

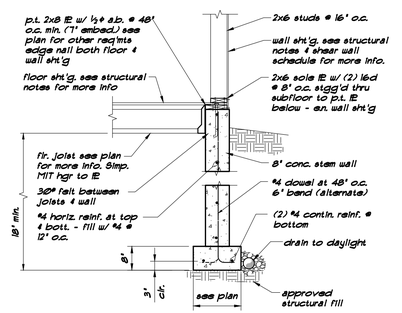

A/S3 Section

½" = 1'-0"

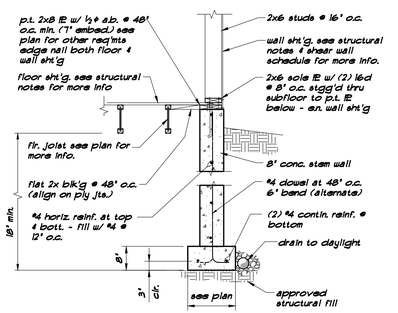

B/S3 Section

½" = 1'-0"

Foundation & Main Floor Framing Plan Notes

1. See sheet S1 for structural notes & S1.1 typical details.
2. Details on these plans are intended to depict the general construction methods for this structure. Connections, details, and conditions not specifically shown that are similiar to those that are specified shall be assumed on and the same. If questions regarding the application of details are encountered, notify the Engineer for clarification in a timely manner prior to construction.
3. All exterior wood framed walls to be sheathed and nailed w/ 8d common nails at 6" o.c. edge, & 12" o.c. field nailing minimum, unless noted otherwise. Use otherwise. ½"ø a.b.'s (7" embed) Use 3x3x3/16" PL washers to p.t. mud sill PL. See shearwall schedule for increased nailing and bolting requirements. Simpson Titan anchor bolts or wedge anchors may be used in place of cast in place anchor bolts.
4. ⊠ Indicates DF 4 post u.n.o. below main floor framing (crawl space). See callout this sheet for post size. All multiple stud posts shall be nailed together w/ (2) row 16d @ 8" o.c. staggered. Use Simpson ABU base at isolated post locations unless noted otherwise.
5. 4" concrete slab w/ #3 @ 16" o.c. ea. way over 6" min. leveling course of crushed rock over undisturbed native soils or approved structural fill.
6. (F) Indicates footing mark. See schedule this sheet for size and reinforcing.
7. All subgrade preparation to be completed in accordance with the Geotechnical Report & approved in the field per the Geotechnical Engineer or representative.
8. Provide and un-coated #4 or larger, reinforcing bar stubbed up at least 12" above the floor plate near the electric service or panel location. this stub must extend to & be tightly attached to at least a 20" section of reinforcing bar located in the footing.
9. Provide a listed non-removable hose bib backflow preventer at potable water outlets w/ hose attachments other than water heater drains and clothes washer connections. hose bibs shall be self draining w/ integral backflow prevention.
10. Provide a 6 mil black polyethylene cover or approved alternate under heated slabs. lap 12 inches at all joints
11. Provide crawl space ventilation per 2014 OSSC one square foot per 150 square foot floor area, distribute to provide cross ventilation of crawl space.

Footing Schedule

mk	Size	Reinforcing
1	1'-0" x 8" continuous	(2) #4 longitudinal
2	1'-8" x 8" continuous	(2) #4 longitudinal
3	2'-0" x 8" continuous	(3) #4 longitudinal
4	2'-6" x 8" continuous	(4) #4 longitudinal
A	2'-0" x 2'-0" x 10"	(3) #4 e.w.
B	3'-0" x 3'-0" x 10"	(4) #4 e.w.

Footnote:
All footing reinforcing to be placed 3" clear from the bottom of the footing.

REGISTERED PROFESSIONAL ENGINEER
58521PE
OREGON
JAN. 14, 2003
SHANE W. EARP

EXPIRES: 12-31-2017

This document, and the ideas and designs incorporated herein, as an instrument of professional service, is the property of Structural Integrity, LLC and is not to be used, in whole or part, for any other project without the written authorization of Structural Integrity, LLC.

STRUCTURAL INTEGRITY, LLC
724 MAIN STREET, SUITE 214
KLAMATH FALLS, OR 97601
541.884.1061

DRAWN DATE 7/14/16

Gary West Living Trust
6-Plex
249 Hyatt Lane
Central Point, OR

FOUNDATION & MAIN FLOOR FRAMING PLAN

JOB NUMBER	SHEET NO.
16090	S3 7 OF 10

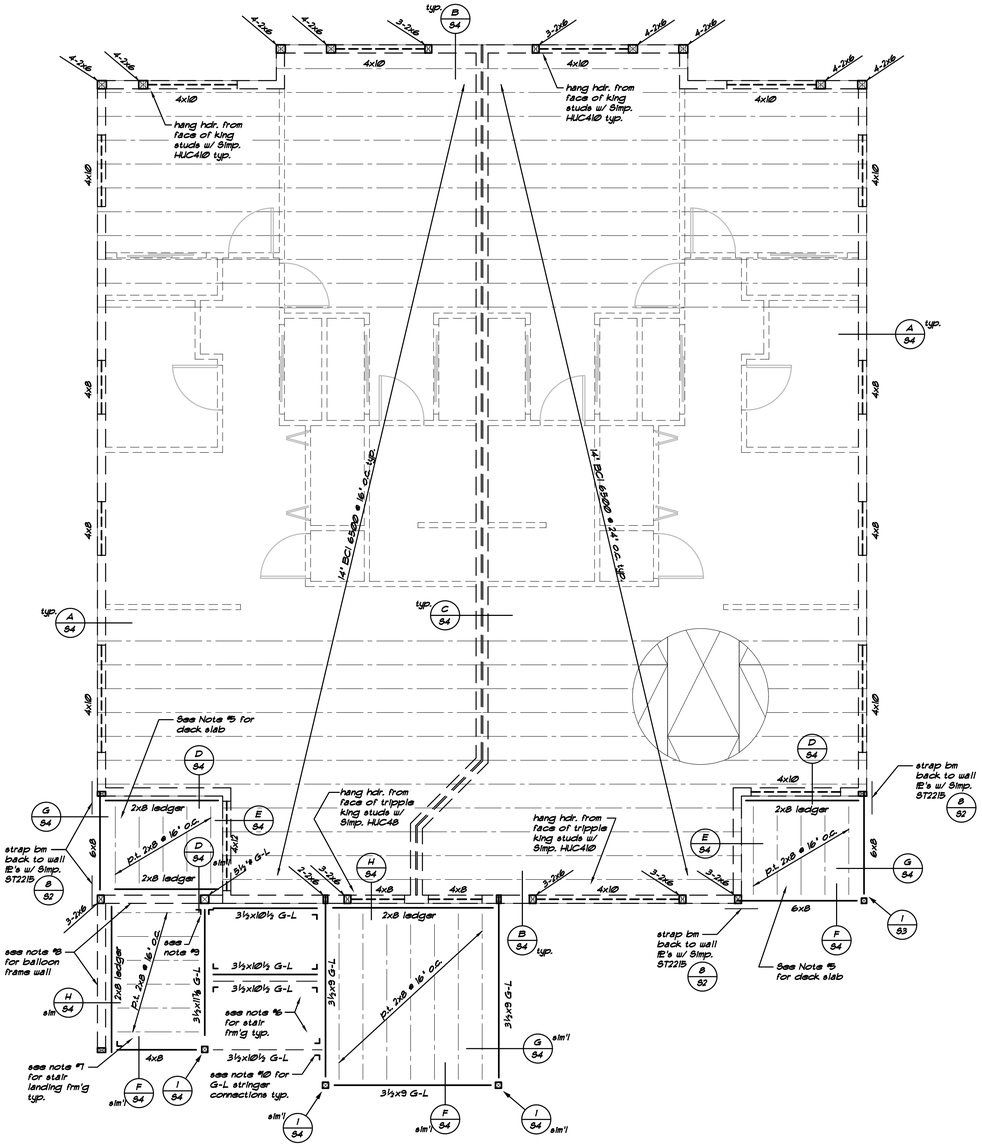

Second & Third Floor Framing Plans

SCALE: 1/4"=1'-0"

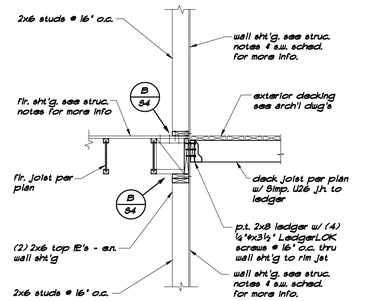

H S4 Section ½" = 1'-0"

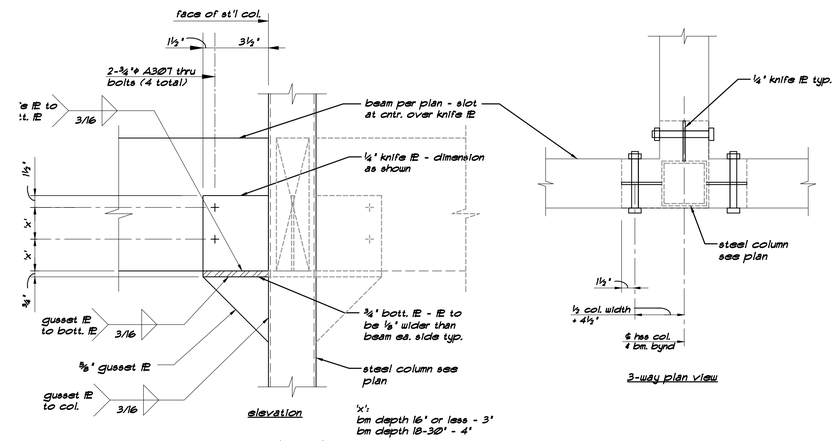

I S4 detail n.t.s.

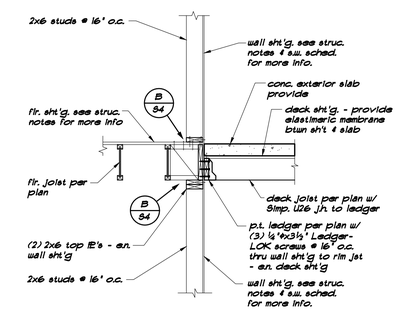

D S4 Section ½" = 1'-0"

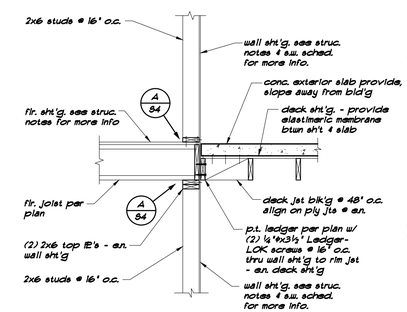

E S4 Section ½" = 1'-0"

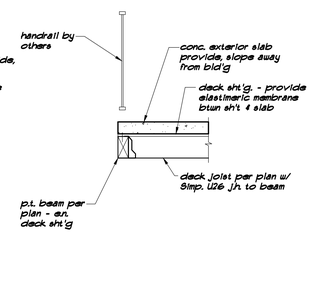

F S4 Section ½" = 1'-0"

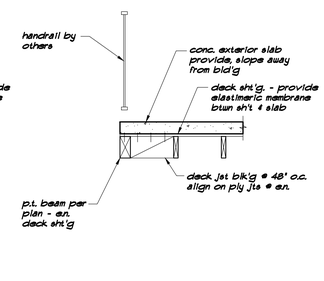

G S4 Section ½" = 1'-0"

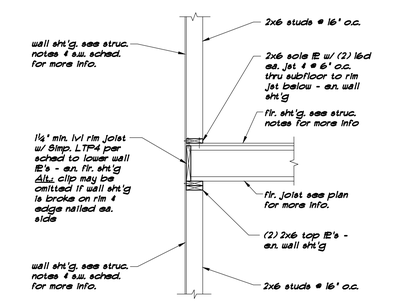

A S4 Section ½" = 1'-0"

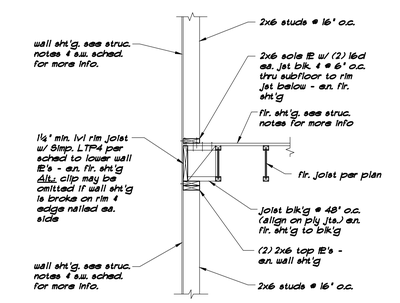

B S4 Section ½" = 1'-0"

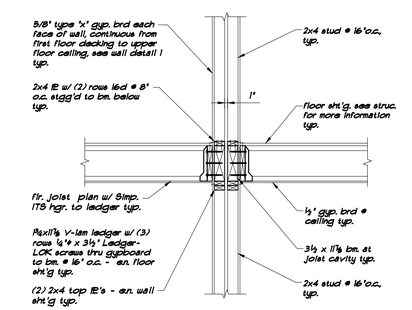

C S4 Section ½" = 1'-0"

Second & Third Floor Framing Plan Notes

1. See sheet S1 for structural notes & S2 typical details.
2. Details on these plans are intended to depict the general construction methods for this structure. Connections, details, and conditions not specifically shown that are similar to those that are specified shall be assumed on and the same. If questions regarding the application of details are encountered, notify the Engineer for clarification in a timely manner prior to construction.
3. All exterior wood framed walls to be sheathed and nailed w/ 8d common nails at 6" o.c. edge, & 12" o.c. field nailing minimum, unless noted otherwise. Use ½"ø anchor bolts @ 48" o.c. w/ 7" min. embedment min. unless noted otherwise. Use 3x3x3/16" IE washers to p.t. mud sill IE. See shearwall schedule for increased nailing and bolting requirements.
4. ☒ Indicates DF #1 post unless otherwise noted below the upper floor or low roof framing. See callout this sheet for size. Posts to extend thru top IE's to underside of beams where occurs. Clip posts that occur in walls to top & bottom IE's w/ Simpson A35 each side. All multiple stud posts shall be nailed together w/ (2) rows 16d @ 6" o.c. staggered.
5. Use 4" nw. concrete slab w/ fibermesh reinforcing over 7/8" t&g sheathing. Provide elastomeric membrane between slab and sheathing. Membrane to extend up against wall sheathing 6" min. Handrails to be steel. Contractor to provide shop drawings to Engineer for review prior to fabrication.
6. Use 3½" glulam stringers as shown on plans. Use prefab concrete tread material at stairs between stringers. Handrails for both stairs & landings to be steel. Contractor to provide shop drawings for handrails & treads to Engineer for review prior to fabrication.
7. Use 2x8 DF #2 joist @ 16" o.c. for stair landing framing. Use 2x6 or composite decking w/ (2) fasteners min. per joist.
8. Use 1½"x5½" Versa studs @ 16" o.c. for walls indicated on plans. Use Simpson A35 clips from studs to p.t. below & top IE's above.
9. Hang 3½ G-L deck beam thru exterior gypboard to side of full height glulam post w/ Simpson HUC412-SDS.
10. Hang stair stringers from landing and deck beams with Simpson HUCQ410-SDS with sloped seat. Fasten stringers that land on top of the landing and deck beams with Simpson HGA10 heavy gusset angles.

REGISTERED PROFESSIONAL ENGINEER 58521PE OREGON JAN. 14, 2009 SHANE W. KARY

EXPIRES: 12-31-2017

This document, and the ideas and designs incorporated herein, as an instrument of professional service, is the property of Structural Integrity, LLC and is not to be used, in whole or part, for any other project without the written authorization of Structural Integrity, LLC.

STRUCTURAL INTEGRITY, LLC
724 MAIN STREET, SUITE 214
KLAMATH FALLS, OR 97601
541.884.1081

DRAWN DATE 7/14/16

Gary West Living Trust
6-Plex
249 Hyatt Lane
Central Point, OR

UPPER FLOOR & LOW ROOF FRAMING PLAN

JOB NUMBER	SHEET NO.
16090	S4 8 OF 10

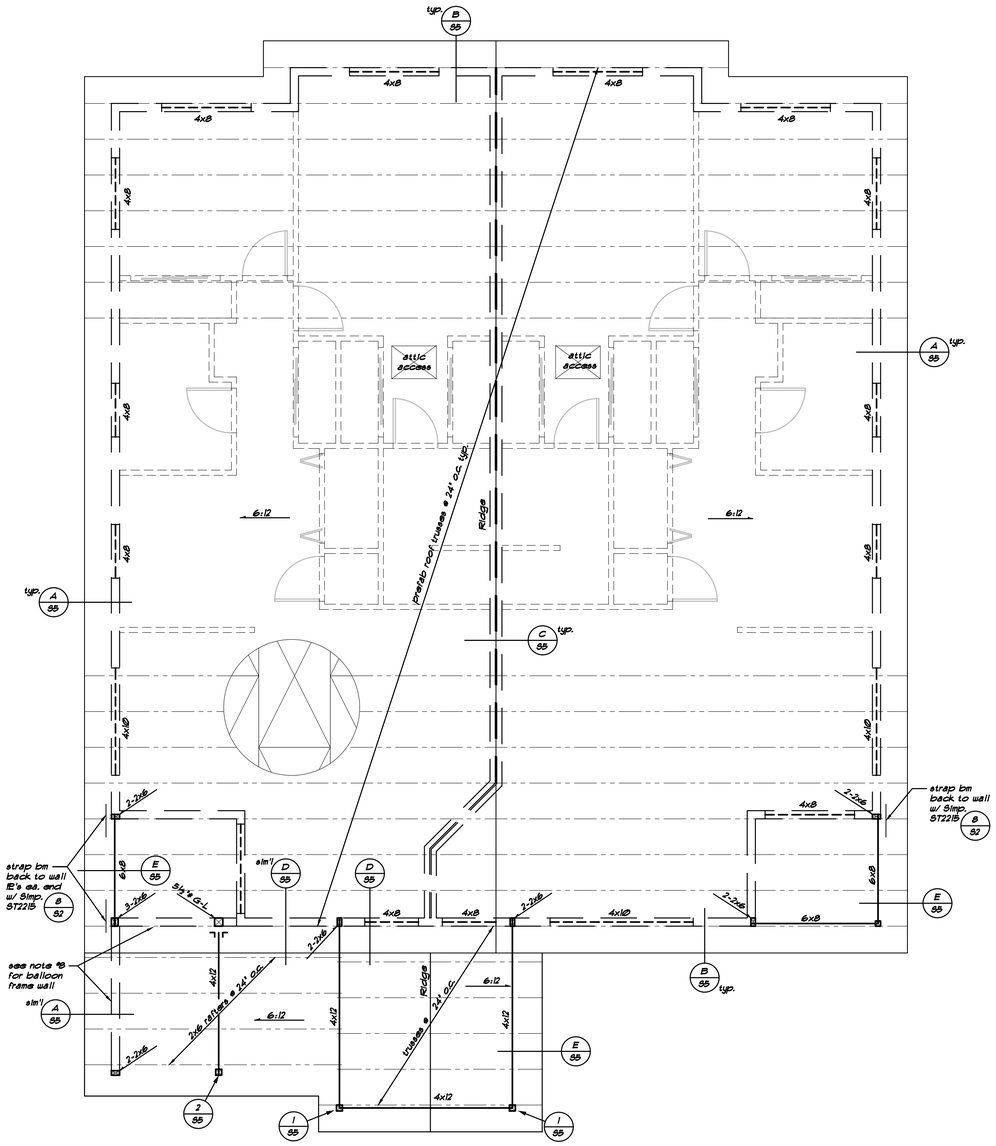

Roof Framing Plans

SCALE: 1/4"=1'-0"

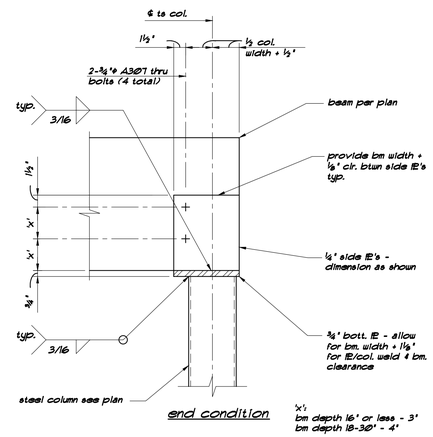

2 S5 detail

n.t.s.

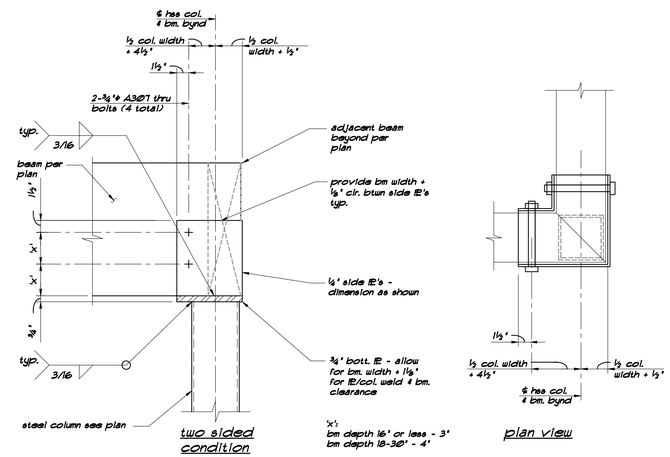

5 S1 column cap detail

n.t.s.

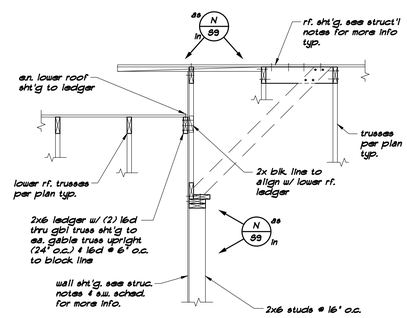

D S5 Section

½" = 1'-0"

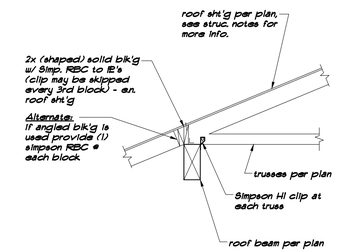

E S5 Section

½" = 1'-0"

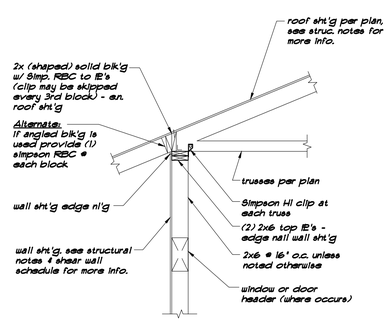

A S5 Section

½" = 1'-0"

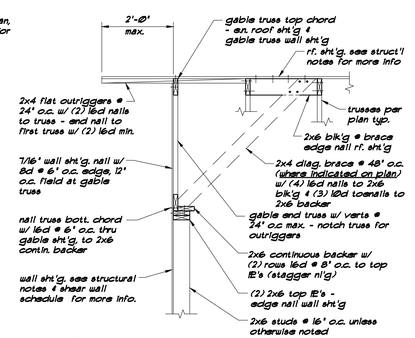

B S5 Section

½" = 1'-0"

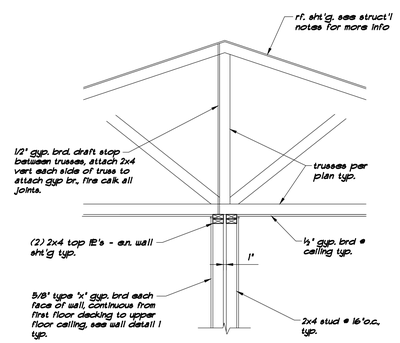

C S5 Section

½" = 1'-0"

Roof Framing Plan Notes

1. See sheet S1 for structural notes & S2 typical details.
2. Details on these plans are intended to depict the general construction methods for this structure. Connections, details, and conditions not specifically shown that are similiar to those that are specified shall be assumed on and the same. If questions regarding the application of details are encountered, notify the Engineer for clarification in a timely manner prior to construction.
3. All exterior wood framed walls to be sheathed and nailed w/ 8d common nails at 6" o.c. edge, & 12" o.c. field nailing minimum, unless noted otherwise. Use ½"ø anchor bolts @ 48" o.c. w/ 7" min. embedment min. unless noted otherwise. Use 3x3x3/16" IE washers to p.t. mud sill IE. See shearwall schedule for increased nailing and bolting requirements.
4. ☒ Indicates DF ¶ post unless otherwise noted below the upper roof framing. See callout this sheet for size. Posts to extend thru top IE's to underside of beams where occurs. Clip posts that occur in walls to top & bottom IE's w/ Simpson A35 each side. All multiple stud posts shall be nailed together w/ (2) rows 16d @ 6" o.c. staggered.
5. Use 1½"x5½" Vares studs @ 16" o.c. for wall indicated on plans. Use Simpson A35 clips from studs to p.t. below & top IE's above.
6. Hang roof beam thru exterior gypboard to side of full height glulam post w/ Simpson HUC410-SDS.

REGISTERED PROFESSIONAL ENGINEER
58521PE
OREGON
JAN. 14, 2003
SHANE W. KEPP

EXPIRES: 12-31-2017

This document, and the ideas and designs incorporated herein, as an instrument of professional service, is the property of Structural Integrity, LLC and is not to be used, in whole or part, for any other project without the written authorization of Structural Integrity, LLC.

STRUCTURAL INTEGRITY, LLC
724 MAIN STREET, SUITE 214
KLAMATH FALLS, OR 97601
541.884.1081

DRAWN DATE 7/14/16

Gary West Living Trust
6-Plex
249 Hyatt Lane
Central Point, OR

ROOF FRAMING PLAN

JOB NUMBER 16090

SHEET NO. S5
9 OF 10

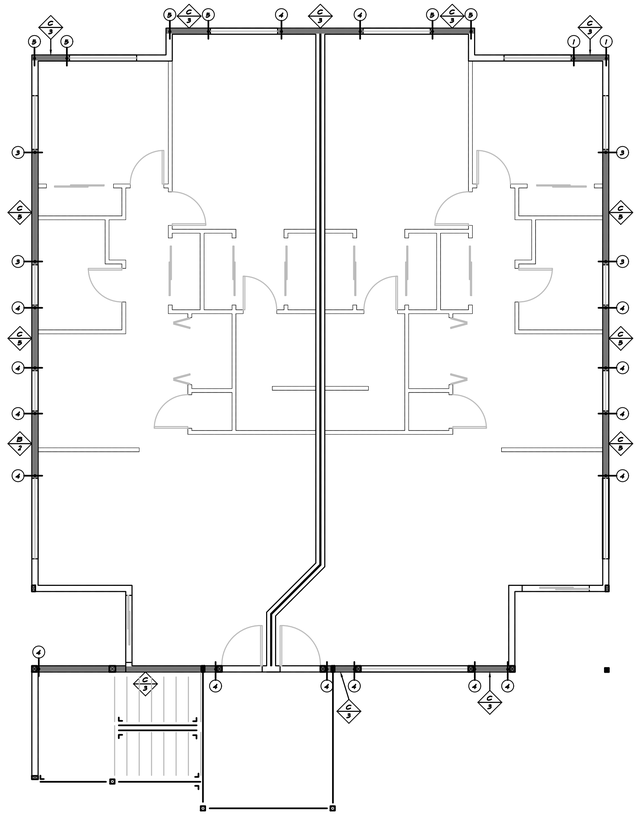

First Floor Lateral Plan

SCALE: 1/4"=1'-0"

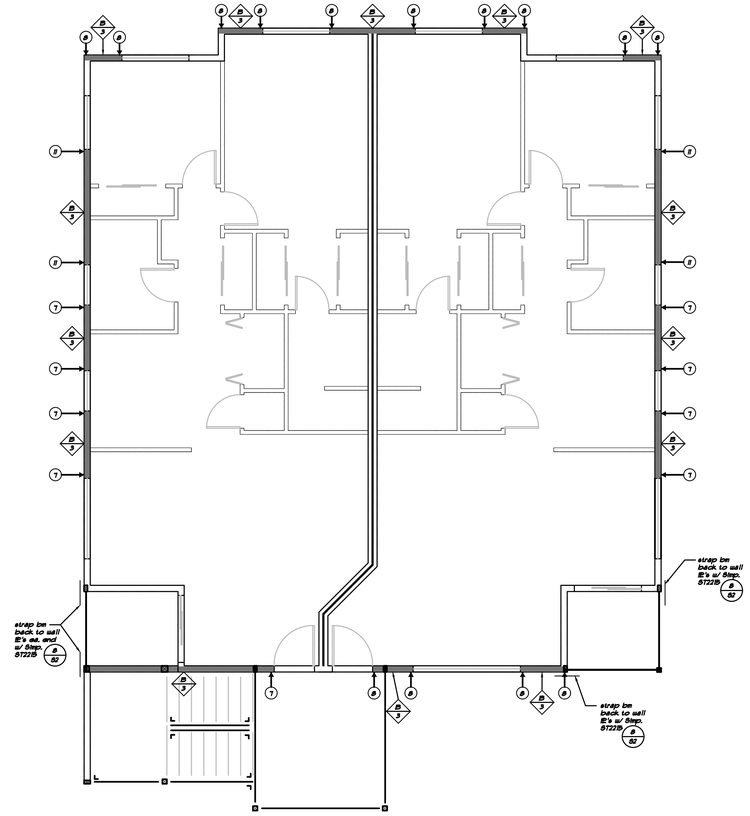

Second Floor Lateral Plan

SCALE: 1/4"=1'-0"

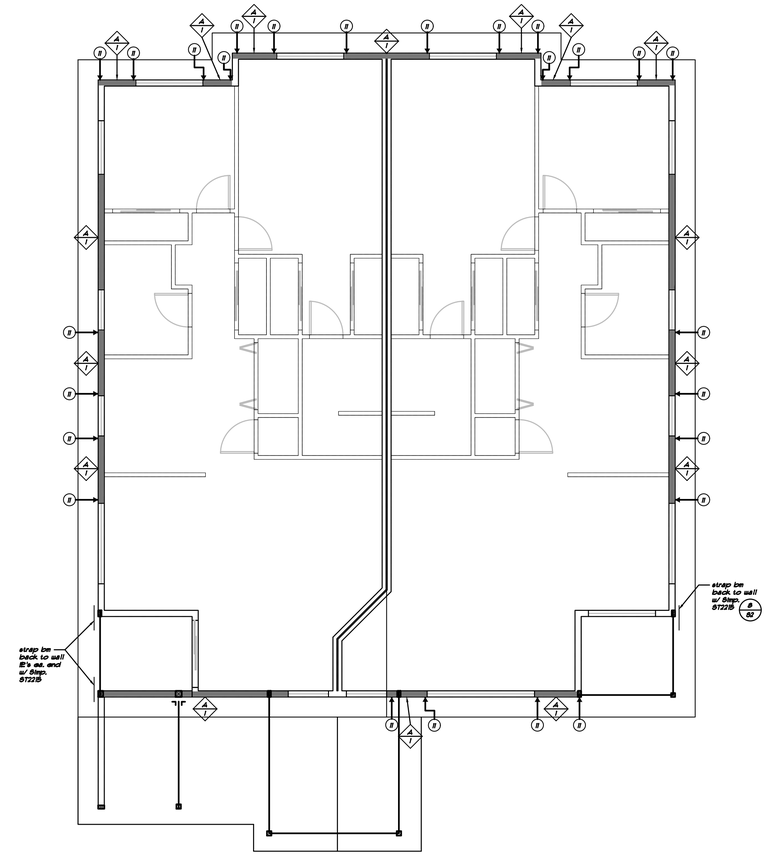

Third Floor Lateral Plan

SCALE: 1/4"=1'-0"

Lateral Bracing Plan Notes

1. Refer to general structural notes on sheet S1.
2. Details on these plans are intended to depict the general construction methods for this structure. Connections, details, and conditions not specifically shown that are similiar to those that are specified shall be assumed on and the same. If questions regarding the application of details are encountered, notify the Engineer for clarification in a timely manner prior to construction.
3. All exterior wood framed walls to be sheathed with 7/16" OSB blocked w/ 8d common nails at 6" o.c. edge, & 12" o.c. field nailing minimum, see shearwall schedule and lateral plan for other requirements.
4. Shearwall and holdown designations. See schedule on this sheet.
5. Attach sole plate w/ (2) rows 16d @ 8" o.c.

SHEAR WALL

1. Shearwalls shall use a minimum of 7/16" OSB sheathing.
2. All panel edges shall be backed with 2" nominal or wider framing. panels may be installed either horizontally or vertically.
3. Field nailing shall be 8d common or galvanized box nails at 6" o.c. for studs spaced 24" on center and 12" o.c. for all other conditions.
4. When 8d nail spacing is 2" o.c. or 10d nail spacing is 3" o.c. or less or wall is double sided w/ nail spacing closer than 6" o.c., framing at adjoining panel edges shall be 4" nominal or wider and nails shall be staggered.
5. Shearwalls may use 3/8" thick sheathing provided studs are spaced a maximum of 16" on center or panels are applied with long dimension across studs. this includes T-1-11 and smartpanel type products. (one or two sided shearwalls)

WALL INFORMATION			DOUBLE SIDED WALL INFORMATION		
	COMMON NAIL	8d BOX		COMMON NAIL	8d BOX
A	8d nails @ 6" o.c. all edges	4" O.C.	E	8d nails @ 6" o.c. all edges	4" O.C.
B	8d nails @ 4" o.c. all edges	3" O.C.	F	8d nails @ 4" o.c. all edges	3" O.C.
C	8d nails @ 3" o.c. all edges	N.A.	G	8d nails @ 3" o.c. all edges	N.A.
D	10d nails @ 3" o.c. all edges	N.A.	H	10d nails @ 3" o.c. all edges	N.A.

Shearwall nailing must be driven so that their head or crown is flush with surface of sheathing. Overdriven nails will not be allowed or counted as surface of sheathing. Overdriven nails will not be allowed as appropriate nailing!!

SILL PLATE CONNECTION

	FOUNDATION CONNECTION		RIM JOIST CONNECTION
1	2x plate, 1/2"ø x 12" a.b.'s w/ 3/16"x3"x3" washer @ 48" o.c.	1	Simpson LTP4 @ 30" o.c.
2	2x plate, 1/2"ø x 12" a.b.'s w/ 3/16"x3"x3" washer @ 32" o.c.	2	Simpson LTP4 @ 20" o.c.
3	2x plate, 1/2"ø x 12" a.b.'s w/ 3/16"x3"x3" washer @ 24" o.c.	3	Simpson LTP4 @ 16" o.c.
4	2x plate, 1/2"ø x 12" a.b.'s w/ 3/16"x3"x3" washer @ 16" o.c.	4	Simpson LTP4 @ 14" o.c.
5	2x plate, 1/2"ø x 12" a.b.'s w/ 3/16"x3"x3" washer @ 12" o.c.	5	Simpson LTP4 @ 12" o.c.
6	3x plate, 1/2"ø x 12" a.b.'s w/ 3/16"x3"x3" washer @ 48" o.c.	6	Simpson LTP4 @ 10" o.c.
7	3x plate, 1/2"ø x 12" a.b.'s w/ 3/16"x3"x3" washer @ 32" o.c.	7	Simpson LTP4 @ 9" o.c.
8	3x plate, 1/2"ø x 12" a.b.'s w/ 3/16"x3"x3" washer @ 24" o.c.	8	Simpson LTP4 @ 8" o.c.
9	3x plate, 1/2"ø x 12" a.b.'s w/ 3/16"x3"x3" washer @ 16" o.c.	For rim joist condition 9 and 10 see details	
10	3x plate, 1/2"ø x 12" a.b.'s w/ 3/16"x3"x3" washer @ 12" o.c.	If wall sheathing is jointed at center of rim joist rim joist connection is not required	

HOLDOWN SCHEDULE

	HOLDOWNS	ANCHOR BOLT	POST		STRAPS	FASTENERS (total)	END LENGTH	POST
1	Simpson HDU2	setb16	(2) 2x	7	Simpson MST37	(20) 16d	9 1/2" min.	(2) 2x
2	Simpson HDU4	setb24	(2) 2x	8	Simpson MST48	(32) 16d	15" min.	(2) 2x
3	Simpson HDU5	setb24	(2) 2x	9	Simpson MST60	(46) 16d	21" min.	4x
4	Simpson HDQ8	setb28	(3) 2x	10	Simpson MST72	(56) 16d	27" min.	4x
5	Simpson HHDQ11	1" (24" embed.)	6x or (4) 2x	11	Simpson CS16	(28) 8d	14"	(2) 2x
6	Simpson HHDQ14	1" (28" embed.)	6x	12	Simpson CMST14	(14) 16d	34"	4x

notes:
1. dbl. studs shall be laminated together with 16d nail at 6" o.c. full height (typical).
2. provide holdowns minimum 6" from each end of shear wall.
3. provide (2) additional #4 dowels with standard hook at each a.b. location.

REGISTERED PROFESSIONAL ENGINEER
58521PE
OREGON
JAN. 14, 2008
SHANE W. KARP

EXPIRES: 12-31-2017

This document, and the ideas and designs incorporated herein, as an instrument of professional service, is the property of Structural Integrity, LLC. and is not to be used, in whole or part, for any other project without the written authorization of Structural Integrity, LLC.

STRUCTURAL INTEGRITY, LLC
724 MAIN STREET, SUITE 214
KLAMATH FALLS, OR 97601
541.884.1281

DRAWN DATE 7/14/16

Gary West Living Trust
6-Plex
249 Hyatt Lane
Central Point, OR

LATERAL PLANS & SHEARWALL SCHEDULE

JOB NUMBER 16090

SHEET NO. S6
10 OF 10